OCHILTREE INTERCHANGE EXPANSION PACKAGE

NORTH PLAINS ELECTRIC COOPERATIVE

NOTICE TO PACKAGERS

November 20, 2026

Informal proposals are requested for firm pricing and delivery quotations for a substation package, as detailed in the attached specifications.

Funding for this project is being provided by the Public Utility Commission of Texas (PUCT), and as such, all provisions from the NPEC Texas Grant Management Standards Flowdown Provisions apply. The provisions are attached to this document.

Public Bid Opening: Bids will be opened at 1:30 P.M., local time, December 11, 2026, in the office of SGS Engineering, 401 – 50th Street, Lubbock, Texas – 79404.

One (1) copy of the quotation is requested to be delivered to the Engineer, SGS Engineering, 401 50th Street, Lubbock, Texas 79404, attention: Mr. John Weaver (jweaver@sgseng.com), by 1:30 P.M., local time, **December 11, 2026**, in order to receive most favorable consideration. **Email quotations will also be accepted.** Please send email proposals to **ALL** email addresses listed above. Bids submitted by email will remain confidential until the scheduled bid opening.

Interested parties may attend in person or remotely. If attending remotely, please inform the Engineer, and provide an email address, and an invitation to the meeting will be sent. A bid tabulation will be maintained and made available after bid opening.

Delivery of the substation material is requested to be no later than **April 4, 2028**. Proposal prices shall be based on F.O.B. delivery to, but not including unloading at, the Substation site approximately 13 miles south of Perryton, Texas. GPS coordinates of the substation site are as follows:

- near GPS coordinates 36° 11' 25"N, 100° 49' 13"W

Special consideration will be given to apparent compliance with the expressed intent as well as to the wording of the Specifications; the proposed delivery schedule; to bidder's apparent knowledge of requirements of Specifications and to all alternates, if presented in such manner as to allow proper evaluation and comparison.

Questions concerning interpretation of Specifications, by the potential Packager, should be directed to the Engineer at the address listed above, to the attention of John Weaver. Please copy Michael Sarkis (msarkis@sgseng.com), and Bob Hollowell (bhollowell@fedsprout.com).

SGS Engineering, LLC

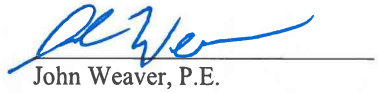

John Weaver, P.E.

NPEC Texas Grant Management Standards Flowdown Provisions

A. Child Support Obligation

Contractor represents and warrants that it will include the following clause in the award documents for every subaward and subcontract and will require subrecipients and contractors to certify accordingly: "Under Section 231.006 of the Family Code, the vendor or applicant certifies that the individual or business entity named in this contract, bid or application is not ineligible to receive the specified grant, loan, or payment and acknowledges that this contract may be terminated and payment may be withheld if this certification is inaccurate. A bid or an application for a contract, grant, or loan paid from state funds must include the name and social security number of the individual or sole proprietor and each partner, shareholder, or owner with an ownership interest of at least 25 percent of the business entity submitting the bid or application."

B. Contract Oversight

Contractor represents and warrants that it will maintain oversight to ensure that contractors perform in accordance with the terms, conditions, and specifications of their contracts or purchase orders.

C. Cybersecurity Training Program

If Contractor has access to any state computer system or database, Respondent shall complete cybersecurity training and verify completion of the training program to the (Public Utilities Commission of Texas) PUCT pursuant to and in accordance with Section 2054.5192 of the Government Code.

D. Debarment and Suspension

Contractor certifies that it and its principals are not suspended or debarred from doing business with the state or federal government as listed on the State of Texas Debarred Vendor List maintained by the Texas Comptroller of Public Accounts and the System for Award Management (SAM) maintained by the General Services Administration.

E. Debts and Delinquencies

Contractor acknowledges and agrees that, to the extent Contractor owes any debt including, but not limited to, delinquent taxes, delinquent student loans, and child support owed to the State of Texas, any payments or other amounts Contractor is otherwise owed under the contract or grant may be applied toward any debt Contractor owes the State of Texas until the debt is paid in full. These provisions are effective at any time Contractor owes any such debt or delinquency.

F. Disclosure of Prior State Employment

In accordance with Section 2254.033 of the Texas Government Code, relating to consulting services, Contractor certifies that it does not employ an individual who has been employed by PUCT or another agency at any time during the two years preceding the submission of the

Response or, in the alternative, Contractor has disclosed in its Response the following: (i) the nature of the previous employment with Agency or the other agency; (ii) the date the employment was terminated; and (iii) the annual rate of compensation for the employment at the time of its termination.

G. Disclosure Protections for Certain Charitable Organizations, Charitable Trusts, and Private Foundations

Contractor represents and warrants that it will comply with Section 2252.906 of the Texas Government Code relating to disclosure protections for certain charitable organizations, charitable trusts, and private foundations.

H. Dispute Resolution

The dispute resolution process provided in Chapter 2009 of the Texas Government Code is available to the parties to resolve any dispute arising under the agreement.

I. Excluded Parties

Contractor certifies that it is not listed in the prohibited vendors list authorized by Executive Order No. 13224, "Blocking Property and Prohibiting Transactions with Persons Who Commit, Threaten to Commit, or Support Terrorism", published by the United States Department of the Treasury, Office of Foreign Assets Control.

J. Executive Head of a State Agency Affirmation

Under Section 669.003 of the Texas Government Code, relating to contracting with an executive head of a state agency, Contractor represents that no person who served as an executive of Agency, in the past four (4) years, was involved with or has any interest in the contract or grant. If Contractor employs or has used the services of a former executive of Agency, then Contractor shall provide the following information in the Response: name of the former executive, the name of the state agency, the date of separation from the state agency, the position held with Contractor, and the date of employment with Contractor.

K. Former Agency Employees

Contractor represents and warrants that none of its employees including, but not limited to, those authorized to provide services under the contract, were former employees of the Agency during the twelve (12) month period immediately prior to the date of execution of the contract.

L. Funding Limitation

Contractor understands that all obligations of Agency under the contract or grant are subject to the availability of grant funds. The contract or grant is subject to termination or cancellation, either in whole or in part, without penalty to Agency if such funds are not appropriated or become unavailable.

M. Governing Law and Venue

This agreement shall be governed by and construed in accordance with the laws of the State of Texas, without regard to the conflicts of law provisions. The venue of any suit arising under this

agreement is fixed in any court of competent jurisdiction of Travis County, Texas, unless the specific venue is otherwise identified in a statute that directly names or otherwise identifies its applicability to the contracting state agency.

N. Indemnification (General)

CONTRACTOR SHALL DEFEND, INDEMNIFY AND HOLD HARMLESS THE STATE OF TEXAS AND AGENCY, AND/OR ITS OFFICERS, AGENTS, EMPLOYEES, REPRESENTATIVES, CONTRACTORS, ASSIGNEES, AND/OR DESIGNEES FROM ANY AND ALL LIABILITY, ACTIONS, CLAIMS, DEMANDS, OR SUITS, AND ALL RELATED COSTS, ATTORNEY FEES, AND EXPENSES ARISING OUT OF, OR RESULTING FROM ANY ACTS OR OMISSIONS OF CONTRACTOR OR ITS AGENTS, EMPLOYEES, SUBCONTRACTORS, ORDER FULFILLERS, OR SUPPLIERS OF SUBCONTRACTORS IN THE EXECUTION OR PERFORMANCE OF THE CONTRACT AND ANY PURCHASE ORDERS ISSUED UNDER THE CONTRACT. THE DEFENSE SHALL BE COORDINATED BY CONTRACTOR WITH THE OFFICE OF THE TEXAS ATTORNEY GENERAL WHEN TEXAS STATE AGENCIES ARE NAMED DEFENDANTS IN ANY LAWSUIT AND CONTRACTOR MAY NOT AGREE TO ANY SETTLEMENT WITHOUT FIRST OBTAINING THE CONCURRENCE FROM THE OFFICE OF THE TEXAS ATTORNEY GENERAL. CONTRACTOR AND AGENCY AGREE TO FURNISH TIMELY WRITTEN NOTICE TO EACH OTHER OF ANY SUCH CLAIM.

O. Law Enforcement Agency Grant Restriction

If Contractor is a law enforcement agency regulated by Chapter 1701 of the Texas Occupations Code, Contractor represents and warrants that it will not use appropriated money unless the law enforcement agency is in compliance with all rules adopted by the Texas Commission on Law Enforcement (TCOLE), or TCOLE certifies that it is in the process of achieving compliance with such rules.

P. Legal Authority

Contractor represents that it possesses legal authority to apply for the grant. A resolution, motion or similar action has been duly adopted or passed as an official act of the Contractor's governing body, authorizing the filing of the Response, including all understandings and assurances contained therein, and directing and authorizing the person identified as the official representative, or the designee of Contractor to act in connection with the Response and to provide such additional information as may be required.

Q. Lobbying Expenditure Restriction

Contractor represents and warrants that Agency's payments to Contractor and Contractor's receipt of appropriated or other funds under the contract or grant are not prohibited by Sections 403.1067 or 556.0055 of the Texas Government Code, which restrict lobbying expenditures.

R. No Conflicts of Interest (State)

Contractor represents and warrants that performance under the contract or grant will not constitute an actual or potential conflict of interest or reasonably create an appearance of impropriety. Further, Contractor represents and warrants that in the administration of the

grant, it will comply with all conflict of interest prohibitions and disclosure requirements required by applicable law, rules, and policies, including Chapter 176 of the Texas Local Government Code. If circumstances change during the course of the contract or grant, Contractor shall promptly notify Agency.

S. No Waiver of Sovereign Immunity

The Parties expressly agree that no provision of the grant or contract is in any way intended to constitute a waiver by the Agency or the State of Texas of any immunities from suit or from liability that the Agency or the State of Texas may have by operation of law.

T. Open Meetings

If the Contractor is a governmental entity, Contractor represents and warrants its compliance with Chapter 551 of the Texas Government Code, which requires all regular, special or called meeting of a governmental body to be open to the public, except as otherwise provided by law.

U. Political Polling Prohibition

Contractor represents and warrants that it does not perform political polling and acknowledges that appropriated funds may not be granted to, or expended by, any entity that performs political polling.

V. Texas Public Information Act

Contractor understands that Agency will comply with the Texas Public Information Act (Chapter 552 of the Texas Government Code) as interpreted by judicial rulings and opinions of the Attorney General of the State of Texas. Information, documentation, and other material in connection with this Solicitation or any resulting contract or grant may be subject to public disclosure pursuant to the Texas Public Information Act. In accordance with Section 2252.907 of the Texas Government Code, Contractor is required to make any information created or exchanged with the State pursuant to the contract, and not otherwise excepted from disclosure under the Texas Public Information Act, available in a format that is accessible by the public at no additional charge to the State.

W. Records Retention (state-grant)

Contractor shall maintain and retain all records relating to the performance of the grant including supporting fiscal documents adequate to ensure that claims for grant funds are in accordance with applicable State of Texas requirements. These records will be maintained and retained by Contractor for a period of four (4) years after the grant expiration date or until all audit, claim, and litigation matters are resolved, whichever is later. Agency reserves the right to direct a Contractor to retain documents for a longer period of time or transfer certain records to Agency custody when it is determined the records possess longer term retention value. Contractor must include the substance of this clause in all subawards and subcontracts.

X. Reporting Suspected Fraud and Unlawful Conduct

Contractor represents and warrants that it will comply with Section 321.022 of the Texas Government Code, which requires that suspected fraud and unlawful conduct be reported to the State Auditor's Office.

Y. State Auditor's Right to Audit

Pursuant to Section 2262.154 of the Texas Government Code, the state auditor may conduct an audit or investigation of any entity receiving funds from the state directly under any contract or indirectly through a subcontract under the contract. The acceptance of funds by the Contractor or any other entity or person directly under the contract or indirectly through a subcontract under the contract acts as acceptance of the authority of the state auditor, under the direction of the legislative audit committee, to conduct an audit or investigation in connection with those funds. Under the direction of the legislative audit committee, the Contractor or other entity that is the subject of an audit or investigation by the state auditor must provide the state auditor with access to any information the state auditor considers relevant to the investigation or audit. Contractor shall ensure that this paragraph concerning the authority to audit funds received indirectly by subcontractors through the contract and the requirement to cooperate is included in any subcontract it awards.

SPECIFICATIONS

for

OCHILTREE INTERCHANGE EXPANSION PACKAGE

North Plains Electric Cooperative

Perryton, Texas

Prepared by

SGS Engineering, LLC
401 50th Street
Lubbock, TX 79404

GENERAL SPECIFICATIONS

1. GENERAL

a) It is the intent of the Owner to purchase materials to expand an existing interchange designed and operated at 115 kV on the high voltage side and 69 kV on the low voltage side.

b) This Specification shall be the basis for material to be supplied by the Packager.

c) All material supplied shall be new. All material supplied shall be manufactured to high standards by skilled personnel. All equipment shall meet the most stringent applicable standards of NESC, RUS, IEEE, ANSI, AISI, and NEMA.

i) Based on the geographic location of the station, the Packager shall ensure structural design meets all requirements of the latest version of any applicable IEEE standard(s) pertaining to the Recommended Practice for Seismic Design of Substations.

d) All applicable material furnished herein shall be listed in the latest edition of RUS Publication 202-1, "List of Materials for Use on Systems of RUS Electrification Borrowers."

e) Items described as being furnished herein are items that are to be furnished by the successful substation Packager per these specifications. Items that are to be furnished by Others are so noted.

2. PROPOSAL

a) The Bidder shall understand that any provisions in his Proposal inconsistent with provisions in this Specification, which are not expressly described or referred to in his bid, will be interpreted and considered as though such inconsistent provision had not been in the Proposal.

b) Complete delivery on the calendar dates established in the Specifications, and confirmed by the Bidder in his bid, shall be considered as an essential obligation of the Packager.

3. CORRESPONDENCE

a) Prior to the notification of an award for the work, please furnish one (1) copy of all correspondence to the Engineer, SGS Engineering, 401 50th Street, Lubbock, TX 79404, Attention: Mr. Michael Sarkis (msarkis@sgseng.com), Attention: Mr. John Weaver (jweaver@sgseng.com), Attention: Mr. Josh Bayer (jbayer@sgseng.com), Attention: Mr. Christian Fuksa (cfuksa@sgseng.com). **Email quotations will also be accepted.** Please send email proposals to **ALL** email addresses listed above.

b) After notification of an award, the successful Bidder shall send all correspondence relating to price, terms or schedules to the Owner in the same quantity as above and to the same address. Correspondence relating to engineering shall be sent to SGS Engineering, LLC, attention John Weaver.

4. SCOPE OF WORK

a) The Bidder shall make his proposal with the understanding the Specifications and applicable drawings are intended to cover all of the work to be done, and unless expressly excluded, any and all labor and materials not indicated therein but which may be necessary to complete any part of the work in a proper, substantial and workmanlike manner are to be furnished by the Packager without additional charge or cost to the Owner.

b) If any apparatus fails to function as specified herein, it shall be the responsibility of the Packager, at his own expense, to correct the malfunctioning equipment.

c) Any intended omissions or exceptions to the requirements of this Specification **must be stated clearly in writing in the Proposal**; otherwise, it will be understood that all work is included. It is **NOT** acceptable to defer to the general body of the quotation and/or bill of material in lieu of providing one (1) specific list of any exceptions.

5. DESIGN

The intent of the Specification is to secure for the Owner structures and apparatus of first-class workmanship in all respects. All components shall be manufactured, fabricated, assembled and finished with workmanship of the highest quality throughout, and in accordance with the best of recognized correct practices. All material shall be new and suitable for the conditions specified.

6. CHANGES

The Owner may, by written Change Order, make any changes, including additions or omissions in quantities ordered, or in the Specifications or drawings. If any such change affects the amount due or the time of performance hereunder, an equitable adjustment shall be made.

7. RIGHT TO USE APPARATUS REQUIRING CORRECTIONS

If after the apparatus has been installed, it is discovered that it or any part thereof or the process performed thereby may require correction as herein elsewhere provided, the Owner shall nevertheless have the right to use such apparatus until such time as it is convenient to the Owner that such apparatus be removed from service for correction.

8. SHIPMENT, DELIVERY & PIECE-MARKING

a) Complete delivery is requested to be no later than **April 4, 2028**.

b) **All gang-operated switches shall be pre-assembled and tested at the factory and shall be shipped fully assembled**.

c) The apparatus shall be shipped in assembled units, insofar as is consistent with good shipping practices. When items must be disassembled for shipment, they shall be match-marked. All units and their containers shall be piece-marked corresponding to the material list and show the Purchase Order Number and the name "**OCHILTREE INTERCHANGE EXPANSION**". Machined and other unpainted surfaces shall be fully protected from impact and weather damage with all holes and openings plugged or covered. All costs of packing, loading and blocking are to be borne by the Packager.

d) The Packager shall send a detailed material list to the Owner at least two (2) days prior to the arrival of the material. This material list shall indicate material description and quantities; each individual piece of equipment and each box shall be called out. The purpose of this is to assure both Owner and Packager of the safe and determined arrival of each piece of equipment for the station.

e) Small material, shipped in boxed or packed quantities, may be marked as a group, i.e., a box of 100 1/2" x 3" stainless steel bolts may be listed as such, and each bolt need not be called out individually. Each individual box must be clearly labeled to facilitate the checkout procedure. A pallet, or box marked with "miscellaneous hardware" will not be acceptable. Marking equipment may not be necessary if the material is wrapped in such a way that the material enclosed is obvious (disconnect switches, for example). If shipped quantities of material are deemed by the receiver of the material to be insufficient, and each piece has not been called out and documented, it will be the responsibility of the Packager to provide additional quantities as needed.

f) Entire pallets marked as a quantity of "one (1) lot" will not be acceptable, unless all pieces on the pallet are identical, such as switches or conduit elbows, and total quantity of pieces are noted. If there are any questions as to the shipping procedure, the Packager shall contact the Owner prior to shipping.

g) All material including but not limited to boxes, pallets, buckets, steel members etc. shall be marked for easy identification.

9. WAIVER

All modifications or rescissions shall be in writing and in no way shall any purported oral modification of the Purchase Order, by the Owner or by the Engineer, operate as a waiver of any of the terms of this Specification.

10. WARRANTY

a) If any defect in the apparatus supplied, or failure to comply with this Specification shall appear within the period of one (1) year from the date of final acceptance of the work, the Packager shall be immediately notified, and he shall thereupon correct without delay and at his own expense the defect or defects of compliance, by repairing the defective part or parts, by supplying a non-defective or non-deficient design. The Packager shall further replace or repair all other similar equipment if such defect may reasonably be expected to develop or occur in such similar equipment.

b) Removal and installation cost of the defective parts or equipment will be at the Packager's expense. In the event that the Packager shall correct any defect or defects or failure of compliance by repair, replacement or correction as herein above provided then with respect to the apparatus corrected, the aforesaid period shall run for one (1) year from the date of completion of installation of such correction and acceptance thereof, provided same is not unreasonably delayed by the Owner.

11. FINAL ACCEPTANCE

Final acceptance of the work supplied under this Specification shall be rendered when the following conditions have been met:

a) Delivery requirements as specified have been accomplished.

b) Drawing submittals and Instruction Book requirements as specified have been received and approved.

c) Warranty and System Responsibility requirements as stated above have been met.

d) Sufficient tests and inspections have been made by the Owner to determine that material meets all the requirements of the Specification and any written agreements between the Owner and the Packager.

12. DRAWINGS (& CALCS) & MATERIAL LIST & CATALOG CUTS

a) The following drawing size is required: 24" x 36".

b) Within the drawings, including but not limited to, General Arrangement drawings and Grounding drawings, the Material List (or Bill of Material) item numbers are each to correspond to one (1) specific part only. It will **not** be acceptable to have one (1) item number correspond to a “general location” encompassing several items like a piece of equipment with its associated connectors and other materials. The one-to-one correspondence (one (1) item number equals one (1) part) is to facilitate checking across the drawing sheets for both continuity and correctness of application of a specific part.

c) The review of the approval drawings shall not relieve the Packager of his obligation to comply with this Specification.

d) **Approval drawings** shall be submitted from Packager to Engineer as soon as possible after the award of the contract (but no later than the dates established via the Bid Form which Packager is to fill out). Approval drawings (AutoCAD 2-dimensional format rather than "3-D") shall be submitted in DWG file(s) to Engineer, attention: Mr. Michael Sarkis (msarkis@sgseng.com), attention: Mr. John Weaver (jweaver@sgseng.com), attention: Mr. Josh Bayer (jbayer@sgseng.com), attention: Christian Fuksa (cfuksa@sgseng.com).

e) An electronic copy of the installation and operations manuals for all switches and motor operators shall be submitted to the Engineer **at the same time as approval drawings.**

f) **Final drawings** shall be submitted from Packager to Engineer as soon as possible after the approval drawings are reviewed by the Engineer and review comments are returned to Packager. Final drawings (AutoCAD 2-dimensional format rather than "3-D") shall be submitted in DWG file(s) to Engineer.

g) Drawings and other documents are required to completely describe all aspects of the substation as follows:

i) **STEEL DETAIL DRAWINGS**: Steel detail drawings showing fabrication details of all steel members are to be provided by Packager. **Every sheet in the steel drawing set shall be titled appropriately, indicating which structure is being shown on the sheet (138kV H-Frame, 25 kV Switch Stand, etc.).**

ii) **STEEL ASSEMBLY DRAWINGS**: Steel assembly drawings showing how all the steel members are to connect together are to be provided by Packager.

iii) **STEEL PLAN VIEW DRAWINGS:** Steel plan view drawings showing where each steel structure is located in the substation**. Must be a separate drawing than the general arrangement plan view.**

iv) **STEEL STRUCTURE CALCULATIONS BOOK**: Steel Structure Calculations book is to be provided by Packager (for all steel structures supplied by Packager, including any steel poles sub-contracted out by Packager) **NO LATER THAN 4 WEEKS ARO**. Loadings at base of all steel structures (which are sufficient to allow foundation design by Others) are to be reported in one (1) summary table in the form of **"factored" loads** (reporting only "unfactored" loads will not be acceptable).

v) **ANCHOR BOLT PLAN & DETAIL DRAWINGS**: Packager is **required** to perform CAD work within the Engineer-provided AutoCAD version of Foundation Layout drawing to create Anchor Bolt plan & detail drawings. Design of all foundations and detail drawings of all foundations will be by Others based on information provided via Packager. Anchor Bolt plan view drawing is to show the centerline location of all foundations (trial size of pier type foundation footprints are to be "scaled" in on plan view but not "dimensioned"; trial size of slab type foundation footprints are to be "scaled" in on plan view drawing but not "dimensioned" except where dimensions are provided by the Engineer). Anchor bolt size, orientation, and projection required above top of concrete are to be indicated on these drawings. Anchor bolt orientation is to be dimensioned off of foundation centerlines. The deliverable back to the Engineer must be an enhanced version of the original Engineer-provided drawing (in AutoCAD format, and with all Engineer font styles retained), with Engineer retaining sole rights to these drawings. Anchor bolt drawings shall be provided **NO LATER THAN 4 WEEKS ARO.**

vi) **GENERAL ARRANGEMENT DRAWINGS**: Packager is **required** to perform CAD work within the Engineer-provided AutoCAD version of General Arrangement drawings (typically consisting of plan view, elevation views, side views, end views, sectional views, and details) to further detail out those drawings as needed, including but not limited to the Packager adding to the drawings Material List item numbers (or Bill of Material item numbers) and above-grade grounding. The deliverable back to the Engineer must be an enhanced version of the original Engineer-provided drawings (in AutoCAD format, and with all Engineer font styles retained), with Engineer retaining sole rights to these drawings.

vii) **GROUNDING LAYOUT DRAWING**: Packager is **required** to perform CAD work within the Engineer-provided AutoCAD version of Grounding Layout drawing (showing below-grade ground runs, ground rods, and connections) to further detail out that drawing as needed, including but not limited to the Packager adding to the drawings Material List item numbers (or Bill of Material item numbers). The deliverable back to the Engineer must be an enhanced version of the original Engineer-provided drawing (in AutoCAD format, and with all Engineer font styles retained), with Engineer retaining sole rights to this drawing. In addition to this sheet, Packager is also required to generate a Grounding Details drawing sheet.

viii) NOTE: The designations for all matching steel and anchor bolts shall remain consistent throughout the Drawings, Structural Calculations and Bill of Material. Example: For a structure designated as A in the Structural Calculations and the Steel Drawings, the anchor bolts for this same structure shall also be designated as A in the Anchor Bolt Plan and Details drawings to avoid any confusion.

ix) NOTE: All above drawings must be clearly labeled with the Owner and Substation name.

h) **MATERIAL LIST**: Packager shall submit Material List, or Bill of Material (in one (1) PDF file to Engineer) to accompany approval drawings for all material to be supplied. Packager shall submit Material List (in one (1) PDF file to Engineer) to accompany released for construction drawings.

i) **CATALOG CUTS**: Packager shall submit Catalog Cuts (in one (1) PDF file to Engineer) to accompany approval drawings for all material to be supplied. The "cuts" shall be copies of the catalog showing the size and descriptions of the material. Catalog cuts are required for all equipment such as, but not limited to, switches, insulators, arresters and other equipment. Catalog cuts are also required for bus connectors and ground connectors. Cuts are not required for miscellaneous items such as nuts, bolts, washers or conductors. Packager shall submit Catalog Cuts (in one (1) PDF file to Engineer) to accompany released for construction drawings.

13. INSTRUCTION BOOK

a) The Packager shall submit, not later than thirty (30) days prior to shipment, three (3) copies of a set of Instruction Books to the Owner, plus two (2) copies of a set to the Engineer. **A copy of the Instruction Book must also be sent in PDF format to the Owner and the engineer via email, ShareFile, or acceptable data storage device.**

b) A copy of the installation and operations manual shall be shipped with each switch and motor operator.

14. SPECIFICATIONS

a) These specifications consist of this document and the following drawings (AutoCAD version of these drawings, except One Line, will be provided to the “awarded” Packager for enhancing and returning to Engineer for approval and subsequently as released for construction):

i) One Line
ii) Plan View

iii) Elevations and Sections
iv) Foundation Layout
v) Grounding Layout

b) These specifications also include the following Miscellaneous Drawings (AutoCAD version of these drawings will "not" be provided to the "awarded" Packager for enhancing, but as appropriate the Packager may elect to generate similar detail on the drawings listed above):

i) TM-33: Fence Grounding.
ii) TM-33-S: Fence Grounding Supplement.
iii) 6M2: Station Service.
iv) 9M1: Light Mount Detail.
v) 9M4: Static Pole Detail (baseplate mounted).
vi) 11M: Breaker Grounding.
vii) 13M2: Lightning Arrester Grounding.
viii) 13M10: Transformer Lightning Arrester Grounding.
ix) 15M1: Typical Switch Grounding.
x) 16M: Warning Sign (English language).
xi) 16M2: Warning Sign (Spanish language).
xii) 16M3: Warning Sign Installation

DETAILED SPECIFICATIONS

1. GENERAL

a) It is the intent of the Owner to purchase materials to expand an existing station designed and operated at 115 kV on the high voltage side and 69 kV on the low voltage side.

b) The material to be furnished herein shall consist of the following items for the station:

i) Incoming/outgoing transmission line taps (jumper wires and terminal connectors).

ii) All steel structures and mechanical connectors.

iii) Static Pole (one free-standing 65' shield wire pole).

iv) Anchor bolts, for all structures supplied herein, and for circuit breakers and circuit switchers.

v) All required buswork and connectors (including shield wires over substation and associated connections).

vi) All station post type insulators for the substation (including porcelain insulators for installation phase-to-ground and polymer insulators for installation phase-to-phase if applicable).

vii) Arresters applicable for 115 kV, 69 kV, and 13.8 kV systems.

viii) Air-break switches for 115 kV and 69 kV systems.

ix) Single phase 15 kV fused disconnect switches and fuses.

x) Potential transformers for 69 kV systems.

xi) Station Service Transformer (**2-bushing**) for 13.8 kV system, pole type, 50 KVA, for primary winding connected line-to-line on a 13.8 kV line-to-line system.

xii) Ground rods, grounding conductor and connections for both above and below ground (exothermic bonding material for below ground). This material is to include all fence grounding material.

xiii) Grounding platforms for air-break switches.

xiv) "Warning - High Voltage" signs.

xv) Twenty-five (25) foot, telescopic hot stick and container.

c) Equipment furnished **by Others** (not part of the scope of supply of this Station Package specification) includes:

i) All existing equipment in the station.

ii) Incoming 115 kV transmission line phase conductor.

iii) Outgoing 69 kV transmission line phase conductor.

iv) Insulator deadend assembly, with attachment hardware at each end of insulator deadend assembly, including conductor deadend strain clamp.

v) Incoming/outgoing transmission line shield wire.

vi) Incoming/outgoing transmission line shield wire deadend assembly, with attachment hardware.

vii) Power Transformer(s).

viii) 115 kV Circuit Switcher(s).

ix) 69 kV Circuit Breaker(s).

x) Control House.

xi) Cable trench and/or conduit.

d) In no case shall any equipment or material clearances be less than the greatest of NEC, NESC, RUS, or IEEE standards.

2. STRUCTURES/ BUSWORK

a) All structures to support buswork, switches, hardware, etc., as shown on the drawings, shall be furnished herein.

b) Manufacturing and Fabrication

i) All work shall be equal to the best modern practice in the manufacture and fabrication of materials of the types covered by these specifications, notwithstanding any omissions from these specifications or drawings. Acceptance of materials shall in no way relieve the Packager of the responsibility for furnishing materials meeting the requirements of these specifications.

ii) Before being laid out or worked, structural material shall be straight and free from kinks and bends. If straightening is necessary, it shall be done by methods that will not injure the metal.

iii) All portions of the work, which will be exposed to view after completion, shall be finished neatly.

iv) All welding shall be performed in accordance with the latest edition of the "Structural Welding Code", as formulated by the American Welding Society.

v) After the shop work has been completed, all material shall be cleaned of rust, loose scale, dirt, oil, grease and other foreign substances. Particular care shall be taken to clean slag from welded areas. After cleaning, all steel shall be galvanized in accordance with ASTM-123.

vi) All holes in material shall be free of excess spelter after galvanizing.

vii) Steel parts shall conform to ASTM specifications A-36, A-283, A-307 and A-3125.

viii) All hardware shall be galvanized in accordance with ASTM standard A-153.

ix) The structures shall meet the deflection limits specified in NEMA SG-6, part 36, with the clarification that any free-standing static pole shall be designed for 2% deflection. The dead-end structures shall be considered Class "A" type structures.

x) For projects involving more than one (1) 115 kV 2-legged H-Frame deadend tower, then all such towers are to be of <u>identical design</u> adequate for the one (1) worst case loading location within the substation.

xi) If applicable, the Highside deadend tower shall have provisions to attach the fiber from an OPGW wire down one of the legs, at the location shown in the drawings. The provisions shall be a separate set of attachment tabs than the ones for the 4/0 copper used to ground the structure.

xii) The **69 kV 3-phase Bus Support Stands** shall be a two-legged structure and shall be made from "square structural tubing".

xiii) The **69 kV 3-phase Switch Stands** shall be a two-legged structure and shall be made from "square structural tubing".

xiv) In general, the structures shall be looked at for loading categories of "NESC Heavy" or "NESC Medium", the choice of which depends on regional location of the structures. **The Packager shall make determination as to whether or not "NESC Heavy" loading category is needed for the design and submit their quotation accordingly (but in no case shall the structures be designed for less than NESC Medium).**

c) Transmission and Distribution Structures

i) The transmission deadend and distribution structures shall support the buswork, arresters, switches, etc., as shown on the drawings. All steel structures should be configured as shown and as dimensioned on the drawings.

ii) The structures shall be designed for the following tension conditions. The structures shall be looked at for loading categories of "NESC Heavy" or "NESC Medium", the choice of which depends on regional location of the structure. The structures shall also be looked at for a wind force on each line of 90 mph with NESC Safety Factor of "1". For dead-end structures, look at transverse loads due to wind on the conductor or phase and also due to the lines not being normal to the face of each structure. Consider the line to be 15 degrees from normal to the face of the structure (this angle shall be considered the average of all lines on one (1) circuit). The structure design shall be based on the worst case of either Extreme Wind or NESC loading category.

a) Incoming 115 kV transmission:

<u>By Line Contractor 795 kcmil (26/7 strand) ACSR – codeword "Drake"</u>
Tension 4000 lb. per phase

b) Incoming/Outgoing shield wire:

<u>By Line Contractor 3/8" EHS (7 strand)</u>
Tension 3000 lb. per conductor

c) Optical Ground Wire:

By Line Contractor .528" OPGW (48 count fiber)
Tension 3000 lb. per conductor

d) Shield wire over substation:

3/8" EHS (7 strand)
Tension 1500 lb. per conductor

e) Outgoing overhead 69 kV transmission:

By Line Contractor 477 kcmil (26/7 strand) ACSR – codeword "Hawk"
Tension 4000 lb. per phase

d) Static Poles

i) One (1) 65-foot-tall steel structures for the free-standing static pole are required herein. The static pole shall support the required 3/8" shield wire(s) over the station, as shown in the drawings. The structure should be made of galvanized steel and should be designed to generally match aesthetically with the high side structures. For projects involving more than one pole, then all poles are to be of identical design adequate for the one worst case loading location within the substation.

ii) These structures will be **baseplate mounted** on top of concrete foundations via anchor bolts.

iii) Handholes (two each, one high near lighting mount, one low near the ground line) and provisions for mounting substation security lights shall be included as shown on the drawing.

iv) Each static pole shall have means of attaching shield wires the entire circumference of the pole, i.e., six or eight equally spaced attachments to accommodate several arrangements of static wires.

v) Several ground pads shall be located at the top of the pole to enable grounding of each static attached.

vi) Two (2) ground pads shall be located at the bottom of each pole to enable grounding of each pole to the ground grid.

e) Anchor Bolts

i) All anchor bolts for the station shall be furnished herein.

ii) Anchor bolts shall be provided and sized appropriately for all structures to be provided by the Packager (including anchor bolts and anchor bolt cages as described in section above for free-standing Shield Wire Poles). The bottom end of anchor bolts shall be of either the "headed style" or the "factory-welded-nut style" (as opposed to 4" hook).

iii) Anchor bolts shall be provided for all equipment as follows:

- Anchor bolts shall be provided for one (1) 115 kV Circuit Switcher and shall have a diameter of 1" and be 44" long (2 pads = 8 anchor bolts).

- Anchor bolts shall be provided for one (1) 69 kV Circuit Breaker and shall have a diameter of 3/4" and be 24” long (1 pad = 4 anchor bolts).

iv) Two (2) heavy hex nuts and two (2) flat washers shall be furnished with each anchor bolt for leveling purposes.

v) Considering each individual structure’s baseplate thickness, the anchor bolt projection above top of concrete is to allow as much as, if not greater than, the “height” of one (1) hex nut to be available for leveling purposes, while still having all threads on all nuts fully utilized and engaged. Without accounting for any height increments introduced by use of leveling nuts, heights of steel structures shall be chosen by Packager to assure other heights above top of concrete foundations as shown on the Engineer-provided bid-basis drawings (such as height to centerline of bus tubing above top of concrete, etc.).

vi) All anchor bolts, nuts and washers shall be galvanized. At a minimum, the top 24 inches of each anchor bolt shall be galvanized in accordance with ASTM A-123.

vii) Anchor bolts shall be manufactured in accordance with the ACI-318 Latest Edition, Building Code Requirements for Reinforced Concrete assuming a concrete compressive strength of **4000** pounds per square inch at 28 days.

viii) Anchor bolt templates shall be provided for all foundations.

ix) Anchor bolt cages for any shield wire poles shall be shipped preassembled.

f) Structure Bolts and Fasteners

i) If possible, one (1) type of structure bolt and one (1) diameter should be used as fasteners for station structures. The bolts and nuts shall be **ASTM A325**. The allowable bolt shear shall not exceed values listed in table VIII-I of REA (RUS) Bulletin 65-1. All structure bolts shall be provided with hexnuts, two (2) flat washers each, and a galvanized lock-washer.

g) Equipment Bolts and Fasteners

i) For station equipment that requires a 1/2” diameter or larger bolt, the bolts shall be **ASTM A325**.

ii) For station equipment that requires a bolt smaller than 1/2” diameter, the bolts shall be **ASTM A307**.

iii) All equipment bolts shall be provided with hex nuts, two (2) flat washers each, and a galvanized lock washer.

h) Terminal Bolts and Fasteners (Stainless Steel)

i) All electrical connections shall be made with stainless steel hardware, no equals allowed (the stainless-steel bolts shall be 18-8 stainless steel type, and the stainless-steel nuts shall be waxed type). All bolted connections through NEMA 4-hole pads and NEMA 2-hole pads shall be made with two (2) stainless steel flat washers and one (1) stainless steel lock-washer for each stainless-steel hex head bolt and stainless-steel hex nut. Taking into account the specific thickness of each NEMA pad being bolted together, height of hex nut, thickness of two (2) flat washers and thickness of one (1) lock-washer, then the **bolt length** shall be such so as to extend past the nut by 1/8" minimum (and 1/4" maximum for EHV applications). Bi-metallic transition plates shall be furnished for each aluminum to copper connection. Contact sealant shall be supplied for all connections.

i) Bus and Switch Insulators

i) Insulators shall be furnished for the complete substation, including all buses and switches.

ii) **Insulators for installation phase-to-ground** shall be standard strength post insulators, porcelain type (unless specifically stated otherwise), with gray glaze, and further designated with NEMA Technical Reference Number (T.R. #) and BIL rating as chosen by the Engineer for the particular system voltage as follows:

a) 115 kV system: NEMA T.R. # 286 (550 kV BIL).

b) 69 kV system: NEMA T.R. # 216 (350 kV BIL).

iii) Regardless of voltage level, all 4 holes on the bolt circle mounting pattern of each bus support insulator shall be used for bolting to steel structures (using only 2 of the 4 holes is not acceptable).

iv) Approved manufacturers of insulators are Lapp, Newell, Victor, and NGK-Locke. Other manufacturers must be pre-approved by the Engineer and called out on the bid form as an exception.

j) Jumper Wires (ACSR and/or AAC and/or Copper) and Bus

i) All jumper and bus material for the station shall be furnished herein. The size of wire and tubing conductor shall be as noted in the drawings.

ii) All tubing bus shall be "**seamless type**" Schedule 40 Aluminum alloy 6063-T6. 795 kcmil (61 strand) AAC conductor shall be provided for dampers in all horizontal bus tubing.

iii) Any copper wire bus conductor (500 kcmil and larger) shall be soft drawn type.

iv) Buswork will have drive-type corona bells on all open-ended aluminum tubing.

k) Connectors, Couplers, Terminals

i) All connectors, couplers and terminals required for the station shall be furnished herein (Excluding stud-to-4-hole-pad bushing connectors for the Circuit Breakers, which shall be furnished by Others).

ii) Welded connectors shall be furnished where possible for bus tubing, except as specifically noted "Mechanical" or "Bolted" connector on the drawings. The packager is not to use the depiction of a connector on the drawing to determine whether it is welded or mechanical.

iii) All bus tubing terminal connectors shall have NEMA pads of the center-formed type.

iv) All connections to jumper wires shall be of the compression type with two-hole or four-hole pads, except as shown on the drawings.

v) All compression connector barrels shall be pre-filled at the factory with oxide inhibiting filler compound (both aluminum compression connectors and copper compression connectors).

vi) For all compression terminal connectors for 500 kcmil and larger conductor, the barrel length available for making compression crimps must be a minimum of 3 inches and the NEMA pad thickness must be a minimum of 3/8 inches.

vii) For any twin-bundled (double conductor) connection going between two (2) NEMA pads, it shall be assured via pad orientation and/or other method that the 2-wire assembly does not "spiral" (twist around its axis) in traversing its path.

viii) All electrical connectors, pads, joints, etc., shall be capable of carrying the rated current of associated bus and jumpers connected to equipment.

ix) All pads shall be sized to match equipment pad sizes (i.e., a 4-hole pad to a 4-hole pad). No 2-hole to 4-hole pad connections shall be permitted. The Packager shall contact the Engineer to determine equipment pad size for equipment not provided by the Packager.

x) The Packager shall supply fixed, slip-fit, and expansion bus support fittings for all bus tubing to compensate for the aluminum's expansion. For any fixed or slip-fit application, the bus support fitting provided shall be "hook-on" type. The Packager shall supply fittings placed as required.

xi) The Packager shall supply expansion connectors in positions shown on the drawings. Expansion leaves are to be oriented in the "**horizontal**" plane unless specifically stated otherwise on the drawings. For expansion terminal connectors, provide similar to Sefcor type 'WFXTC". For expansion mid-span connectors, provide similar to Sefcor type "WXCF" (with internal tubular alignment guide). For expansion bus support connectors, provide similar to Sefcor type WXCTO (*complete with flat welded end plugs to seal off end of tubing*). Expansion connectors shall be welded type and shall **not** terminate on transformer bushings or arresters.

l) Conductor, Static Wires, and Neutral Wires

i) The 115 kV transmission line conductor material shall be furnished by Others. Complete material to terminate the incoming/outgoing conductor and the associated static wires shall be furnished by Others. The Packager shall provide means of attachment for the transmission line hardware, i.e., eyebolts or steel flanges.

ii) The 69 kV distribution line conductor material shall be furnished by Others. Complete material to terminate the outgoing conductor and the associated neutral wires shall be furnished by Others. The Packager shall provide means of attachment for the distribution line hardware, i.e., eyebolts or steel flanges.

iii) The Packager shall provide 3/8" EHS for the OHGW over the substation between static masts (applicable for free-standing Static Poles as well as static masts at the top of 115 kV Substation Deadend Towers and static masts at the top of 69 kV Substation Take-off Towers). The Packager shall provide means of attachment for this wire in all locations and means to connect the static wire to ground pads on the masts provided herein (including connection to ground wire going down the substation deadend/take-off towers; no ground wire runs down the free-standing Static Poles).

3. THREE PHASE GROUP OPERATED AIR-BREAK SWITCHES

a) General

i) Standard strength insulators are acceptable for group-operated switches.

ii) **All group operated switches shall be assembled and tested at the factory and shipped fully assembled.**

iii) Switches furnished must meet ANSI Standards C37.30 through C37.35, latest revisions, and NEMA Standard SG-6. All steel shall be stainless or be galvanized after fabrication as described in Structures/Buswork.

iv) The Packager shall furnish copies of design test verifying continuous and momentary current ratings, icebreaking capabilities in open and closed positions, and that ANSI Standard C37.34 testing requirements are met.

v) Each switch shall be fully coordinated to provide a length of break in the fully open position at least 10% in excess of the dry arcing distance over the insulators as required by ANSI C37.32. Each switch shall use materials in accordance with temperature requirements of ANSI C37.30.

vi) Each switch shall be capable of being continually loaded to a minimum of 122% of rated current at an ambient temperature of 25°C.

vii) All vertical break switches shall open at least 90° in the fully open position.

viii) Each operating mechanism shall be provided with a flexible copper braid for grounding.

ix) The type of operating mechanism to be provided on an individual switch basis shall be as detailed in sections below.

x) **Switch operating handle/motor operator locations must match the Ground Mat locations as shown on the Grounding Layout drawing. It is the responsibility of the Packager to ensure that the steel is manufactured to accept the switches in the correct configuration, as shown in the drawings.**

b) Specific

i) Jaw-to-blade contacts shall be self-wiping, high-pressure, silver inlay-to-inlay or silver inlay-to-silver plate. All hinged contacts shall be silver inlay-to-silver inlay or silver inlay-to-silver plate. In the case of silver inlay-to-silver inlay, the two (2) inlays shall be of different hardness.

ii) All exposed contacts, both fixed and moveable, shall be replaceable in the field.

iii) Minimum thickness of silver plates shall be three (3) mils, and minimum thickness of silver inlay shall be fifteen (15) mils.

iv) Terminal pads other than aluminum shall be silver- or tin-plated. Air-break switch terminal pads shall be:

a) NEMA 4-hole, 3" x 3" minimum, for 600-amp switches.

b) NEMA 4-hole, 3" x 3" minimum, for 1200-amp switches.

c) NEMA 4-hole, 4" x 4" minimum, for 1600 – 4000-amp switches.

v) The rotating insulator stacks on each switch pole and the outboard bearing shall have permanently lubricated and sealed ball bearings to provide smooth and trouble-free operation of the switch.

vi) Each switch shall be mounted on a base of galvanized structural steel channel and shall be adequate to support full cantilever strength rating of the insulator. All necessary adapting galvanized steel supports shall be furnished herein.

vii) Mounting details of the switch bases and operating mechanisms of each switch shall be provided for approval with other drawings required herein.

viii) The operating mechanism shall provide positive control of the switch blades at all times and the travel from the fully closed position to the fully open position shall be accomplished with one (1) smooth motion.

ix) The horizontal interphase and vertical operating rods shall be Schedule 40 galvanized steel pipe, **with appropriate piercing bolts provided**, and meet or exceed the minimum IPS shown in the following tab

Voltage Rating	Horizontal Rods	Vertical Rods to 40'	Vertical Rods 40' to 60'
69 kV	2"	2"	2"
115 kV	2"	2"	2"

x) The length of each interphase rod and the offset rod shall be adequately adjustable to allow proper alignment of the switch.

xi) All clevises on control rods shall come complete with perforating screw feature.

xii) The control mechanism shall have positive adjustable stops on the grounded portion of each switch pole and on the outboard bearing for both the open and closed positions. All switches shall include provisions for the adjustment of each individual switch pole. These provisions shall be of continuously threaded type for correction of misalignment in the switch insulators, bases and operating pipes. Each operating pipe section, interphase, offset and interpole rod shall have at least one (1) threaded section on one (1) end. It shall be mechanically impossible, after final adjustment has been made, for any switch to remain in a partially open or closed state at the completion of an operating cycle.

xiii) The operating handle shall have position indicators with provisions for padlocking in both the open and closed position.

xiv) The maximum operating effort shall be 50 lbs. for a swing-handle operator or 35 lbs. for a manually operated gear mechanism.

xv) High strength bolts shall be supplied where necessary and clearly marked on installation drawings.

c) Quantities

i) For use as Line Disconnect Switch, one (1) 115 kV, 1200-amp three phase, group operated, center side-break "VEE" type air-break switches shall be furnished with **standard arcing horns**. The 3-phase switches shall be Cleaveland/Price type CB-AV Catalog #C26A021G02, **no equals permitted**. See drawings for required phase spacing.

a) 115 kV L-L nominal design voltage.

b) 1200 amps maximum continuous current.

c) 61 kA maximum momentary current.

*d) Complete with "tubular" blades ("**truss" blades are not acceptable**).*

e) Complete with manual swing handle operator. Motor operator is NOT required.

f) Full load break vacuum interrupters **are not** required.

ii) For use as a Transformer Low Side Disconnect Switch, Bus Disconnect Switch, and Breaker Bypass Switch, three (3) 69 kV, 1200-amp three phase, group operated, vertical break air-break switch shall be furnished with **standard arcing horns**. The 3-phase switches shall be Cleaveland/Price type V2-CA Catalog #C06A032G22, **no equals permitted**. See drawings for required phase spacing.

a) 69 kV L-L nominal design voltage.

b) 1200 amps maximum continuous current.

c) 61 kA maximum momentary current.

d) Complete with manual swing handle operator. Motor operator is NOT required.

e) Full load break vacuum interrupters **are not** required.

iii) For use as Breaker Disconnect Switches, two (2) 69 kV, 1200-amp three phase, group operated, center side-break "VEE" type air-break switches shall be furnished with **standard arcing horns**. The 3-phase switches shall be Cleaveland/Price type CB-AV Catalog #C26A021G01, **no equals permitted**. See drawings for required phase spacing.

a) 69 kV L-L nominal design voltage.

b) 1200 amps maximum continuous current.

c) 61 kA maximum momentary current.

d) *Complete with "tubular" blades ("**truss" blades are not acceptable**).*

e) Complete with manual swing handle operator. Motor operator is NOT required.

f) Full load break vacuum interrupters **are not** required.

4. ARRESTERS

a) Three (3) station class **96 kV (76 kV MCOV**) arresters shall be furnished herein for mounting in **underhung** manner on the 115 kV substation deadend structure.

b) Three (3) station class **60 kV (48 kV MCOV**) arresters shall be furnished herein for mounting in **underhung** manner on the 69 kV substation deadend structure.

c) All arresters shall be capable of connecting 4/0 Copper to the base for means of grounding the arrester.

d) All arresters shall meet or exceed ANSI C62.11, latest version (IEEE Standard for MOV Surge Arresters). All arresters shall be of the gapless type, shatterproof, with gray glazing. Arresters shall have a **polymer** housing (instead of porcelain).

e) Pre-approved products are GE, Ohio-Brass, Joslyn, Cooper and ABB. Style number and construction (polymer housing) must be called out in the proposal.

5. SINGLE POLE DISCONNECT SWITCHES

a) Standard strength insulators are acceptable for single pole switches.

b) All switches provided herein shall be substation class. The connector pads for all switches shall be machine finished and tinned on both sides, front and back, to accommodate all connections and required connectors detailed in the drawings.

c) 15 kV Power Fuse disconnect assemblies are to be furnished complete for protection of the two-bushing Station Service Transformer **connected line-to-line (on the 13.8 kV line-to-line Transformer Tertiary)**, and are to include the following with all necessary accessories for proper operation:

i) MOUNTINGS: Two (2) S&C type SMD-20 Power Fuse mountings (catalog number 192222R2-Z5), station vertical offset mounting, 15 kV nominal voltage, 110 kV BIL, 200E maximum amperes, 14 kA interrupting amperes, including Live Parts with end fittings, porcelain insulators, and tinned terminal pads.

ii) FUSE UNITS for protection of one (1) Station Service Transformer: Four (4) 6K amperes rating type SMU-20 Fuse Units (catalog number 702006), for S&C type SMD-20 15 kV Power Fuse mountings. The four (4) fuses include two (2) spares.

6. INSTRUMENT TRANSFORMERS

a) **Three (3) 69 kV single-phase Potential Transformers (PT's)** shall be provided as detailed herein with characteristics as follows:

i) These potential transformers shall be ***ITEC* type VTO-350, catalog #VB103500350T000** (or an equivalent alternate called out on the bid form, subject to approval of the Engineer) for connection line-to-ground on a system having nominal 69 kV line-to-line operating voltage.

ii) Single-phase (single-bushing).

iii) Wound type (inductive type).

iv) Oil-filled, with expansion bellows, oil level indicator, fill plug and drain valve.

v) 350 kV BIL, 60 Hz.

vi) Porcelain housing to be gray in color.

vii) NEMA 4-hole pad line terminal, and NEMA 2-hole case ground. **The 4-hole pad line terminal must be on <u>the top</u> of the PT head (not on the side of the PT head; no exceptions allowed**).

viii) Insulated Neutral "H0" terminal (factory connected to unit's ground pad before shipping).

ix) Secondary terminal box.

x) 40,250 volts primary ***rating*** (for connection line-to-ground on a system which is *nominally* 69,000 volts line-to-line).

xi) Complete with dual secondary windings and dual ratios.

xii) 350/600 & 350/600:1 ratio (giving 115/67.08 volts ***rating*** for <u>each</u> of secondary windings).

xiii) 0.3 W, X, Y, Z & ZZ accuracy.

xiv) 6000 VA thermal burden rating.

a) **<u>Current Transformers (CT's)</u>** – Current transformers are NOT required by the Packager for this project.

7. STATION SERVICE TRANSFORMERS

a) One (1) station service transformer shall be supplied herein, **<u>for use at the Main Bus on the 13.8 kV Station Service Structure, energized at 13.8 kV phase to phase</u>**, with each station service transformer being as follows:

i) Transformer to be conventional pole-type.

ii) 50 KVA rating.

iii) 110 kV BIL preferred, 95 kV BIL is acceptable.

iv) Complete with <u>two primary bushings</u> and suitable for both installation connections described below:

a) Primary side connection <u>line-to-line</u> on a system bus having <u>13.8 kV line-to-line</u> (connected across two of the three phases).

b) Primary side connection <u>line-to-ground</u> on a system bus having <u>13.8 kV line-to-ground</u> (connected across two of the three phases).

c) The station service transformer primary *winding* will nominally see 13,800 volts across it.

d) NOTE: For this particular project, this station service transformer primary winding will be connected line-to-line on a 13.8 kV line-to-line system.

v) 120/240 volts secondary output.

vi) Transformer preferred to have two (2) standard taps above and two (2) standard taps below rated voltage (on the primary winding).

vii) External tap changer handle preferred.

viii) Secondary terminal adapter – stud to 4-hole flat pad - required for all secondary bushings similar to Sefcor Type TASP-10-4A. ½" stud to 3"x3" pad.

8. FOUNDATION DESIGN

a) All foundation designs for this project are **by Others**. Anchor Bolt plan & detail drawings are required from Packager as detailed in the General Specifications section of this Package Spec.

9. GROUNDING CONDUCTOR AND CONNECTORS

a) General

i) All new grounding material for the station expansion shall be furnished herein, as shown on the drawings.

ii) All ground conductor shall be 4/0, 7-strand soft drawn bare copper cable, except for #2 bare **solid** copper (**tinned**) for going up fence fabric, #2 bare stranded copper (tinned) for grounding PTs, and Station Service Transformers, and **#2 bare stranded copper (tinned)** for going from base of equipment (power transformer, circuit breaker, or circuit switcher) up to the control cabinet on that equipment, as shown on the drawings or detailed in these specifications.

iii) To better assess the quantity of 4/0 copper ground wire required, note that from top to bottom in the substation yard, there will be a "4-inch-thick crushed rock layer", and then a "6 inch thick caliche pad" underneath that, and finally "soil" below that. The underground ground grid shall be placed at a depth of 18 to 24 inches into the "soil" (which is same as 24 to 30 inches below top of caliche pad, which is also same as 28 to 34 inches below top of crushed rock layer).

iv) Copperweld ground rods shall be furnished and installed as shown on the drawings. For this specific project, there are ground rods distributed around the fence perimeter as shown on the drawings.

v) All underground conductor-to-conductor and conductor-to-ground rod connections are to be made using an exothermic welding process, and that exothermic welding process is to be CADWELD brand (**or Engineer approved alternate**). **For cross-connection of conductor, Packager shall provide welding molds such that cutting of conductor will "not" be required.** At least one (1) welding mold shall be furnished for every 15 shots of each type of connection.

vi) **The wire size of the existing ground grid is unknown**. For the new connections to the existing ground grid, the packager shall supply welding molds for 4/0 taps to 4/0, 3/0, 2/0 and 1/0 runs. At least one (1) welding mold **OF EACH** shall be furnished for every 15 shots.

vii) **In addition to the required number of shots, the Packager shall also provide additional shots, 10% of what is required rounded to the nearest 10**.

viii) Clamps to attach the ground bus to the structures shall be furnished herein and placed on a maximum spacing of 5 feet. All above ground clamps and compression fittings for grounding are to be furnished herein.

b) Cable Trench

A 4/0 copper wire shall be run along the full length of the cable trench. The wire shall be tapped off from the ground grid as shown in the drawings. The Packager shall provide the 4/0 copper wire and all required connections. The cable trench is provided by Others.

c) Transmission Line Deadend

There shall be a 4/0 tap from the underground ground grid to a bonding point near the base of each deadend tower leg where ground connection is made. Two (2) ground wires per tower (on diagonally opposite legs if a 4-legged tower) shall be continued up the full height of the tower to the top of the tower's static mast. Each attached overhead ground wire (OHGW) shall be jumpered and electrically bonded to the ground wire which runs the full height of the tower (packager to supply connection material). Where any equipment other than air-break switch or single pole switch is present on the structure, then a 4/0 horizontal run shall be made between two (2) 4/0 vertical runs, with connectors, conductor, and ground pads being supplied to connect this horizontal run of 4/0 into the equipment ground points.

d) Static Pole (free-standing steel structure)

There shall be a 4/0 tap from the underground ground grid to a bonding point near the base of each free-standing static pole where ground connection is made. Each attached overhead ground wire (OHGW) shall be jumpered to a ground pad near the top of each pole. The Packager shall supply transition pads and other appropriate hardware to make this connection near the top of the pole. The steel pole itself will serve as a ground conductor (between the cited connection points at top and bottom of pole); accordingly, a separate ground wire will not be run up the full height of the static pole.

e) Distribution Structure

i) A-Frame deadend tower structure (if present): There shall be a 4/0 tap from the underground ground grid to a bonding point near the base of each deadend tower leg where ground connection is made. One (1) ground wire per A-Frame tower shall be continued up the full height of the tower to the top of the tower's static mast and attach to the lightning mast with an appropriately sized pipe grounding clamp. If there are station service and/or instrument transformers mounted on the A-Frame tower, the ground wire on the opposite leg shall also continue up to and across the equipment support beam and connect to the opposite ground wire creating a continuous ground loop that the station service transformer and instrument transformers (if applicable) will be grounded to. Each attached overhead ground wire (OHGW) shall be jumpered and electrically bonded to the ground wire which runs the full height of the tower (packager to supply connection material). A 4/0 horizontal run shall be made between each A-Frame tower, and connected to the 4/0 vertical runs, with connectors, conductor, and ground pads being supplied to connect this horizontal run of 4/0 into the equipment ground points. See drawings for further details.

f) Other Structures/Supports

There shall be a 4/0 tap from the underground ground grid to a bonding point near the base of each support column or bus support leg where ground connection is made. Where any equipment other than air-break switch or single pole switch is present on the structure, then the 4/0 tap shall be extended from this connection point, up the structure leg to the level of the equipment, where a 4/0 horizontal run shall be made between two (2) 4/0 vertical runs, with connectors, conductor, and ground pads being supplied to connect this horizontal run of 4/0 into the equipment ground points.

g) Lightning Arresters

A 4/0 copper cable attached to the grounding grid will be run alongside all high side and low side lightning arresters (from ground grid at one (1) location, up to arresters, and back down into ground grid at a second location). All arresters shall be grounded to this 4/0 copper cable as shown in the miscellaneous drawing 13M2, Lightning Arrestor Grounding.

h) Switch Operator Platforms

One (1) switch operator platform shall be provided by the Packager for each group operated air-break switch and circuit switcher (a total of seven (7) platforms). The switch operator platform shall be grounded at one (1) point only via a length of 4/0 Cu. connecting into the ground wire on the switch stand column (**no** ground connection shall be made from the switch operator platform directly into the underground ground grid). The vertical operating rod of each switch is grounded with a flexible braided strap which shall connect to the 4/0 ground wire on the column. Switch grounding shall be as shown in the platform grounding drawing 15M1 included in the drawings section.

i) Circuit Breakers

Two (2) two-hole ground pads shall be furnished for each circuit breaker to permit the grounding at diagonally opposite corners of the base of each circuit breaker stand or enclosure. **Two (2) additional two-hole ground pads shall be furnished to ground the HV cabinet on each circuit breaker.** The bottom two-hole pads shall be through-type to allow the 4/0 Cu from the ground grid to extend to the two (2) two-hole pads at the HV cabinet of the circuit breaker. These connections shall be grounded by means of a 4/0 copper cable connected to the grounding grid and attached with a two-hole ground pad, similar to *Anderson* type SWL. For any foundation installed now for a future circuit breaker, Packager is still to provide connection from the ground grid for the future circuit breaker and note on the drawings "coil un-terminated pigtails on top of the foundation".

j) Circuit Switchers

Two-hole ground pads shall be furnished for each circuit switcher to permit the grounding at each column(s) of each circuit switcher. These shall be grounded by means of a 4/0 copper cable connected to the grounding grid and attached with a two-hole ground pad, similar to *Anderson* type SWL. The column ground closest to the control cabinet shall be extended with #2 copper wire; and attached to the control cabinet with a two-hole ground pad, similar to *Anderson* type SWL. For any foundation installed now for a future circuit switcher, Packager is still to provide connection from the ground grid for the future circuit switcher and note on the drawings "coil un-terminated pigtails on top of the foundation".

k) Instrument Transformers

For a multi-legged support structure, each instrument transformer shall be grounded from a continuous loop of 4/0 copper (from ground grid at one (1) location, up to instrument transformers, and back down into ground grid at a second location). For a single-legged support structure, each instrument transformer shall be grounded from a continuous run of 4/0 copper (from ground grid at one (1) location, and up to instrument transformers). The instrument transformers shall be grounded to this run by a #2 tinned copper wire.

l) Station Service Transformer

For a multi-legged support structure, the station service transformer shall be grounded from a continuous loop of 4/0 copper (from ground grid at one (1) location, up to station service transformer, and back down into ground grid at a second location). For a single-legged support structure, each station service transformer shall be grounded from a continuous run of 4/0 copper (from ground grid at one (1) location, and up to instrument transformers). For either structure, the transformer shall be grounded by a separate continuous wire connected from the 4/0 copper wire, to the H2 bushing, to the X2 bushing, to the case ground, and then back to the 4/0 copper wire to create a continuous ground loop, as shown on Miscellaneous Drawing 6M2. This wire shall be #2 stranded tinned copper.

m) Power Transformer

i) The Power Transformer(s) shall be grounded in accordance with the drawings and in accordance with the requirements below.

ii) Near the base of the Power Transformer provided by Others will be found two (2) ground pads. The two (2) ground pads will be at diagonally opposite corners of the Power Transformer. Each ground pad will be tapped with NEMA 2-hole drilling. Packager is to provide for one (1) connection at each ground pad for 4/0 copper wire coming from the underground ground grid. The Packager is also to provide the 4/0 copper wire going up the transformer, forming a loop above the transformer, and returning down the opposite side of the transformer. All connections as shown in the Miscellaneous Drawing 13M are also to be provided by the Packager.

n) Fence

The fence shall be grounded in accordance with drawing TM-33 and TM-33 Supplement. Grounding material shall be supplied for all gates shown on the drawings. The location of the gates may change from the location shown on the drawings. Ground clamps shall be similar to *Anderson* types GC-110 and GC-111. Fence post sizes for eight foot fence (including one (1) foot of barbed wire):

Post Location	Type	Minimum Size
Line	Round	2-3/8" O.D.; t = .154" (2-inch IPS nominal)
End, Corner, & Pull	Round	2-7/8" O.D.; t = .203" (2 ½ inch IPS nominal)
Gate	Round	4" O.D.; t = .226" (3 ½ inch IPS nominal)
Top Rail on Fence	Round	1 5/8" OD: t = .138"
Gate Frame (Including Top Rail)	Round	1.9" OD; t = .138" (1 ½" IPS nominal)

o) Control House

i) Grounding material at the Control House building shall be provided in accordance with the drawings and in accordance with the requirements below.

a) The building shall be grounded to the station ground grid at the four (4) corners of the building (at 2-hole ground pads outside and on base of building), creating a continuous ground loop outside and around the building structure as shown on the drawings. **Supply of ground wire and connections for looping outside the building and tapping to the Building corners is in the scope of the Packager**.

b) *For any building other than pre-fabricated factory-assembled metal Drop-In type (which comes complete with ground loop already installed)*, then whether via connection through the four (4) corners of the building from outside ground pads, or via other means, a continuous 4/0 copper ground wire loop "**inside**" the building along the walls for the full length of its perimeter shall be provided and bonded to the station ground grid outside the building. For the one (1) 14' X 28' Control House (provided by Others) for the project at hand, the building is "Built-on-site" type, and therefore **supply of ground wire for looping inside the building along the perimeter walls is in the scope of the Packager**.

c) In addition to the requirement above, the station ground grid is to be extended into the overhead cable tray inside the building from the underground ground grid (via the Cable Tray Riser on the outside wall of the building), looping the 4/0 inside the full length of the indoor overhead Cable Tray in the building before exiting the building and terminating again on the station ground grid. **Supply of ground wire for looping inside the horizontal Cable Tray and vertical Cable Tray Riser is in the scope of the Packager**.

p) Yard Light Pedestals

The lights shall be grounded in accordance with drawing 9M1. Grounding material shall be supplied for all lights shown on the drawings. The location of the lights may change from the location shown in the drawings. Ground clamps shall be similar to *Anderson* types GC-110 and GC-111.

Post Location	Type	Minimum Size
Yard Light Pedestals	Round	2-3/8" O.D.; t = .154" (2 inch IPS nominal)

10. OTHER

a) The Packager shall provide "Warning - High Voltage" signs to be mounted at twelve (12) locations on the substation fence. At each of the twelve (12) locations, two (2) warning signs are to be provided, one (1) in English language (see drawing 16M) and one (1) in Spanish language (see drawing 16M2).

i) The warning signs shall be UTICOM type, with Anti-Theft Fence Brackets included.

ii) If the UTICOM type signs are not available, then the warning sign installation shall be per the miscellaneous drawing titled "Warning Sign Installation 16M3". Please note the use of Unistrut and hardware as the backing for the signs. **This Unistrut and associated hardware shall be furnished by the Packager.**

b) The Packager shall provide one (1) twenty-five foot telescopic fiberglass hotstick and container for fence mounting. The Packager shall provide one (1) 20-foot, 2-piece, extendable Hastings 3121 hotstick and container (or direct equivalent) for fence mounting. The Packager shall ensure that the proper size container is chosen for this hotstick. Any alternate hotstick shall be sent to the Engineer **for approval**.

c) The packager shall provide three (3) quarts *Anderson* VERSA-SEAL electrical joint compound, **no equals permitted**. The joint compound shall be furnished in twelve (12), 8oz. containers. NOTE: Oxide inhibitor for flat pad-to-pad connections shall be "non-gritted" type. Any additional oxide inhibitor needed for inside of the barrels on compression terminal connectors shall be "gritted" type.

BID FORM – OCHILTREE INTERCHANGE EXPANSION PACKAGE

This form must be returned with the quotation in order to receive consideration.

	Item	Quantity	Unit Price	Total Price
A1	Structures (other than free-standing static poles)	1 Lot	_____	_____
A2	Static Pole, free standing, 65 feet tall	1	_____	_____
A3	Buswork	1 Lot	_____	_____
B1	3ϕ 115kV "VEE" type Switch,1200A, Swing Handle	1	_____	_____
B2	3ϕ 69kV "VEE" type Switch,1200A, Swing Handle	2	_____	_____
B2	3ϕ 69kV Vertical Break Switch,1200A, Swing Handle	3	_____	_____
C1	96 kV (76 kV MCOV) Arrester, station class, underhung	3	_____	_____
C2	60 kV (48 kV MCOV) Arrester, station class, underhung	3	_____	_____
D1	1ϕ 15 kV Fused Disconnect Switch	2	_____	_____
G1	69 kV PT's (40,250 kV ref. voltage, 350/600 & 350/600:1 ratio)	3	_____	_____
H1	50 kVA Station Service Transformer (13.8 kV across primary winding with 120/240 VAC output) – 2-bushing	1	_____	_____
O1	Grounding	1 Lot	_____	_____
			TOTAL	_____

Note: All material not *specifically* addressed on this Bid Form shall be tabulated in the Structure "A1" or Grounding "O1" Lots.

BID FORM – OCHILTREE INTERCHANGE EXPANSION PACKAGE

This form should be returned with the quotation in order to receive consideration.

Substation Package Price _____

Complete Delivery Dates

Approval Document – **Steel Structure Calculations**	_____	(weeks ARO)
Approval Drawing – **Anchor Bolt plan & detail**	_____	(weeks ARO)
Approval Drawings – steel structures	_____	(weeks ARO)
Approval Drawings – other than steel	_____	(weeks ARO)
Anchor Bolts	_____	(weeks ARO)
Structural Steel	_____	(weeks ARO)
Static Pole, 65' tall	_____	(weeks ARO)
Bus	_____	(weeks ARO)
3-phase Switches	_____	(weeks ARO)
1-phase Switches	_____	(weeks ARO)
115kV Potential Transformers	_____	(weeks ARO)
Station Service Transformers	_____	(weeks ARO)
Balance of Package	_____	(weeks ARO)

Total Steel Weight

Anchor Bolts	_____	(pounds)
Static Pole, 65' tall	_____	(pounds)
All other steel	_____	(pounds)

Are there any exceptions to the specifications? _____

If there are exceptions to the specifications, list all such exceptions (use additional page if necessary). NOTE: It is **NOT** acceptable to defer to the general body of the quotation and/or bill of material in lieu of providing one (1) specific list of any exceptions.

_____
_____
_____

Packager _____
Prepared by _____
Date_____

Miscellaneous Drawings

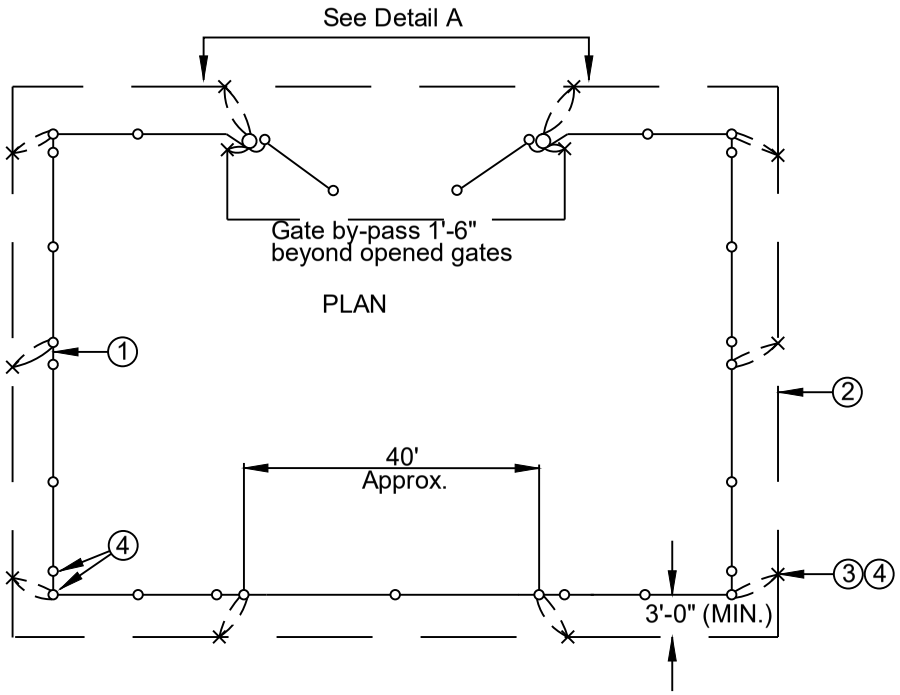

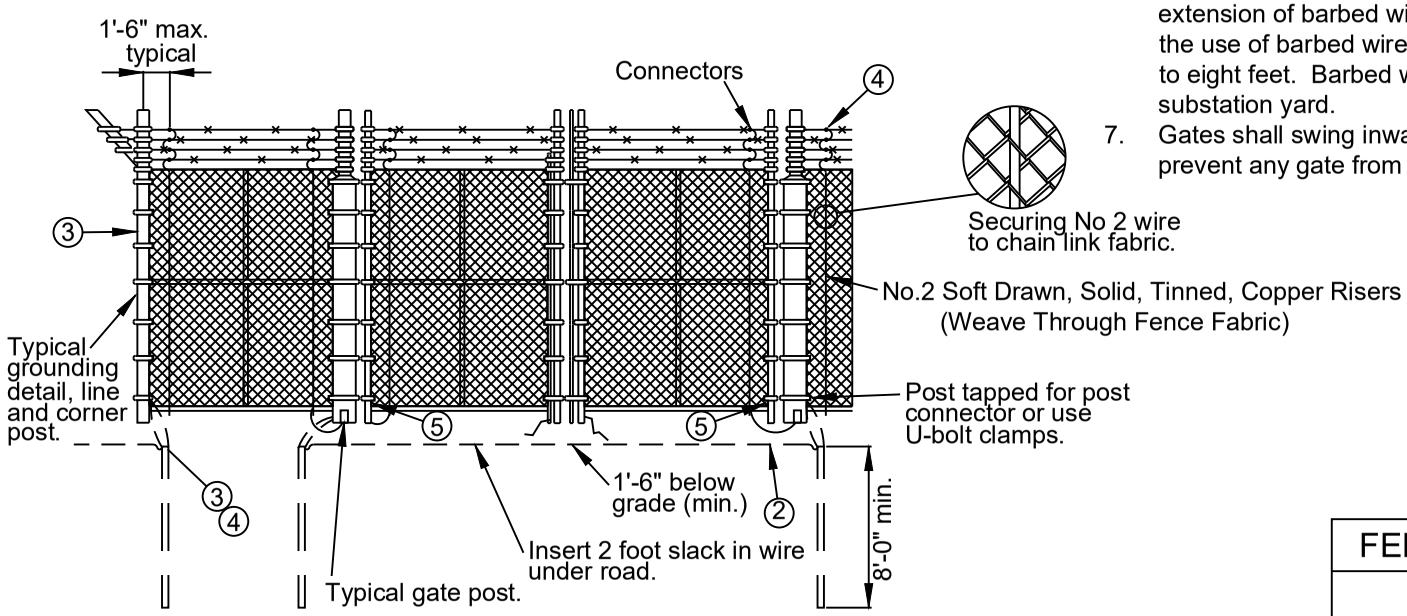

LIST OF MATERIALS

REF.	QTY.	DESCRIPTION	ITEM
1		Wire, No. 2 Cu Solid, Bare, Tinned, as req'd.	
2		Substation grounding wire, as req'd.	sr
3		Ground rods, 8'-0" min. length, as req'd.	a
4		Connectors and clamps, as req'd.	p
5		Copper braid, flexible, tinned, 1 1/2" X 3/16".	

NOTES:

1. The fence ground is to be interconnected with the station ground bus.
2. Ground wire should be connected to fence posts, to all gate posts and to all corners.
3. Wire to be looped through Ground Rod Clamps and Fence Clamps to keep wire splices to a minimum.
4. For other requirements refer to S-6, REA specifications for grounding in steam-electric generating plants and associated step-up substations.
5. Connections between fence ground and station ground bus should be at intervals such as to limit potential gradients (step potentials) and should have adequate current-carrying capacity for the maximum foreseeable line-to-ground fault current.
6. Minimum fence height shall be eight feet. This should normally consist of seven feet of fabric and one foot extension of barbed wire. Where local ordinances prohibit the use of barbed wire, the fence fabric must be increased to eight feet. Barbed wire should overhang away from the substation yard.
7. Gates shall swing inward ONLY. Proper use of hinge shall prevent any gate from swinging outward.

FENCE GROUNDING - TM33

SGS ENGINEERING
LUBBOCK, TX DALLAS, TX SAN ANTONIO, TX

Date: 11-6-2019

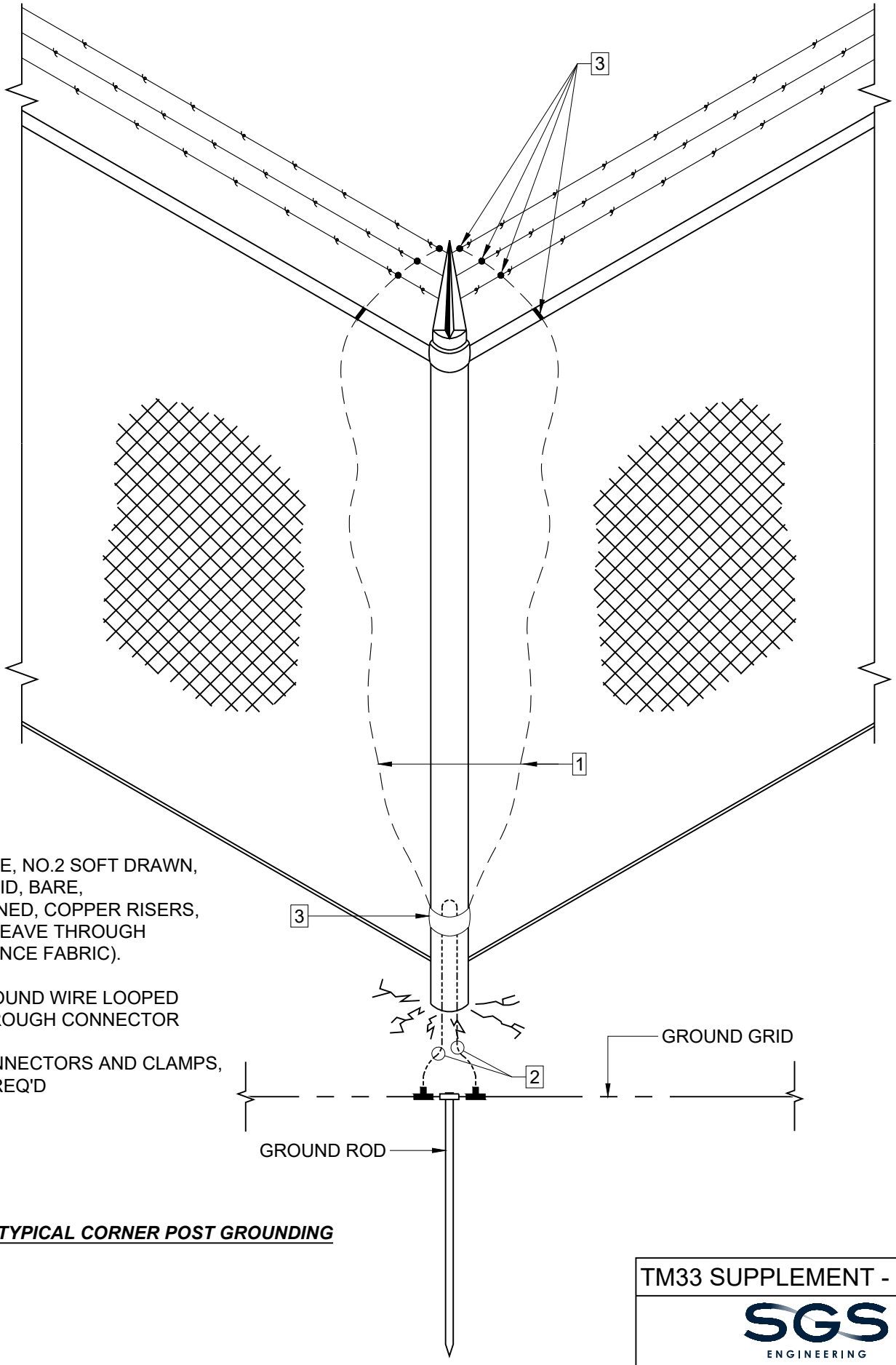

1. WIRE, NO.2 SOFT DRAWN, SOLID, BARE, TINNED, COPPER RISERS, (WEAVE THROUGH FENCE FABRIC).
2. GROUND WIRE LOOPED THROUGH CONNECTOR
3. CONNECTORS AND CLAMPS, AS REQ'D

TYPICAL CORNER POST GROUNDING

TM33 SUPPLEMENT - TM-33-S

SGS ENGINEERING
LUBBOCK, TX DALLAS, TX SAN ANTONIO, TX

DATE: 01-29-2021

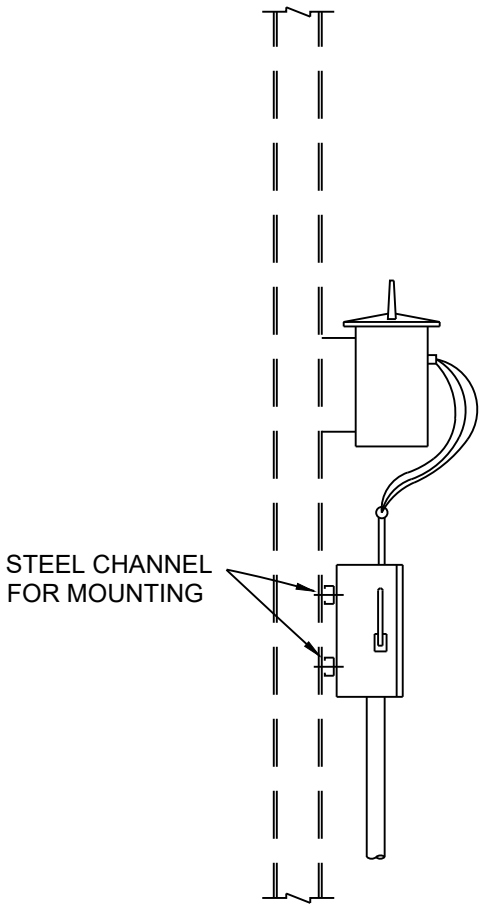

SIDE VIEW

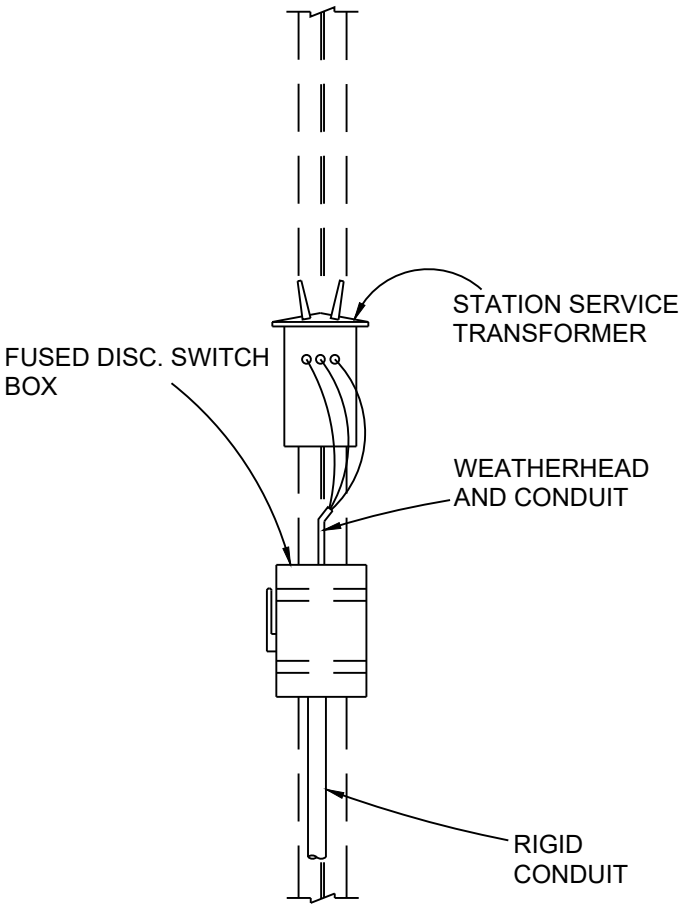

FRONT VIEW

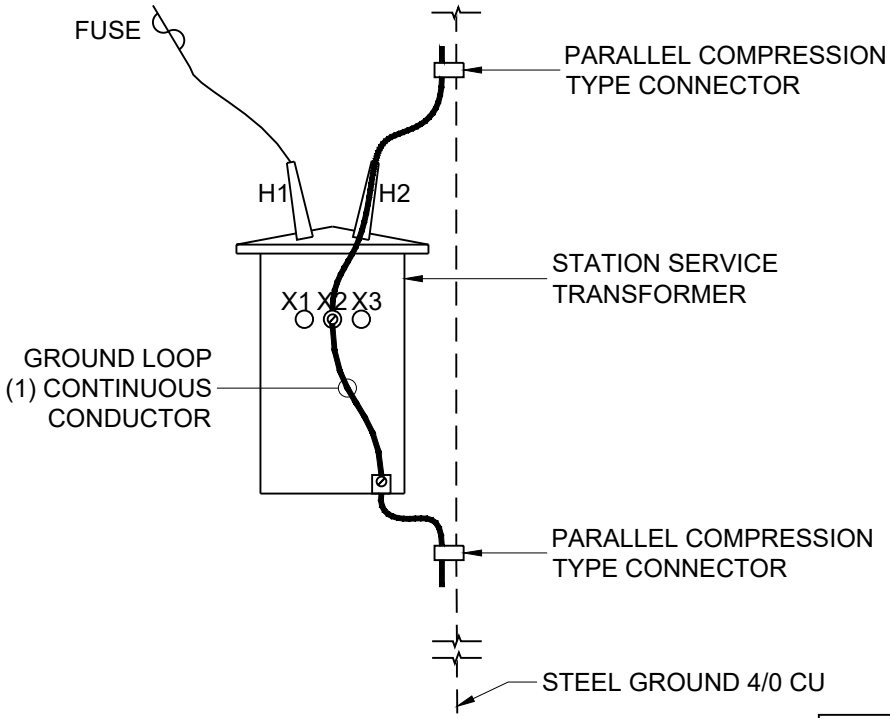

STATION SERVICE TRANSORMER
"GROUND LOOP" GROUNDING

DATE: 5-21-19

STATION SERVICE TRANSFORMER - 6M2

SGS ENGINEERING
LUBBOCK, TX DALLAS, TX SAN ANTONIO, TX

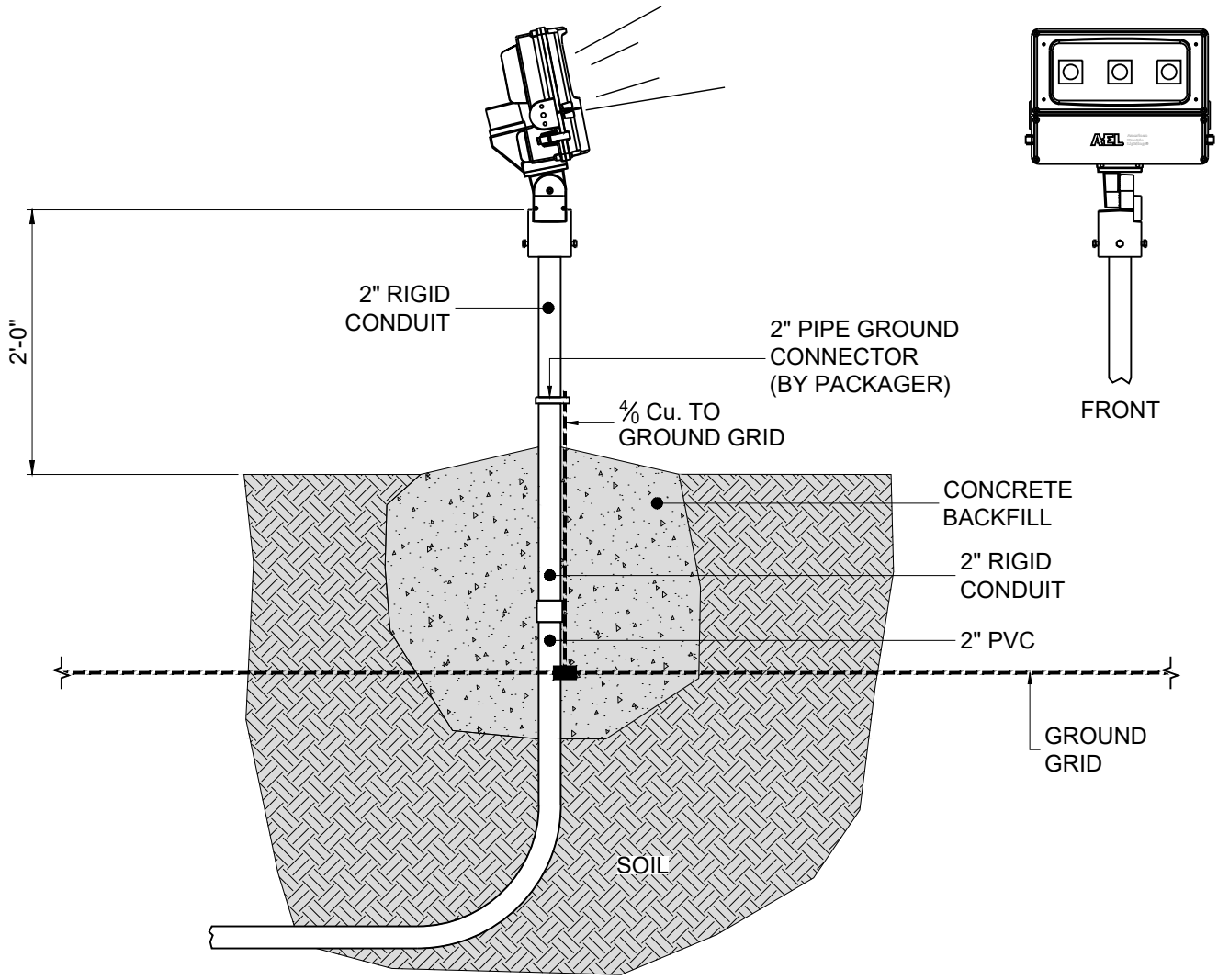

LED LIGHT MOUNT DETAIL - 9M1

DATE: 1-21-21

SGS ENGINEERING
LUBBOCK, TX DALLAS, TX SAN ANTONIO, TX

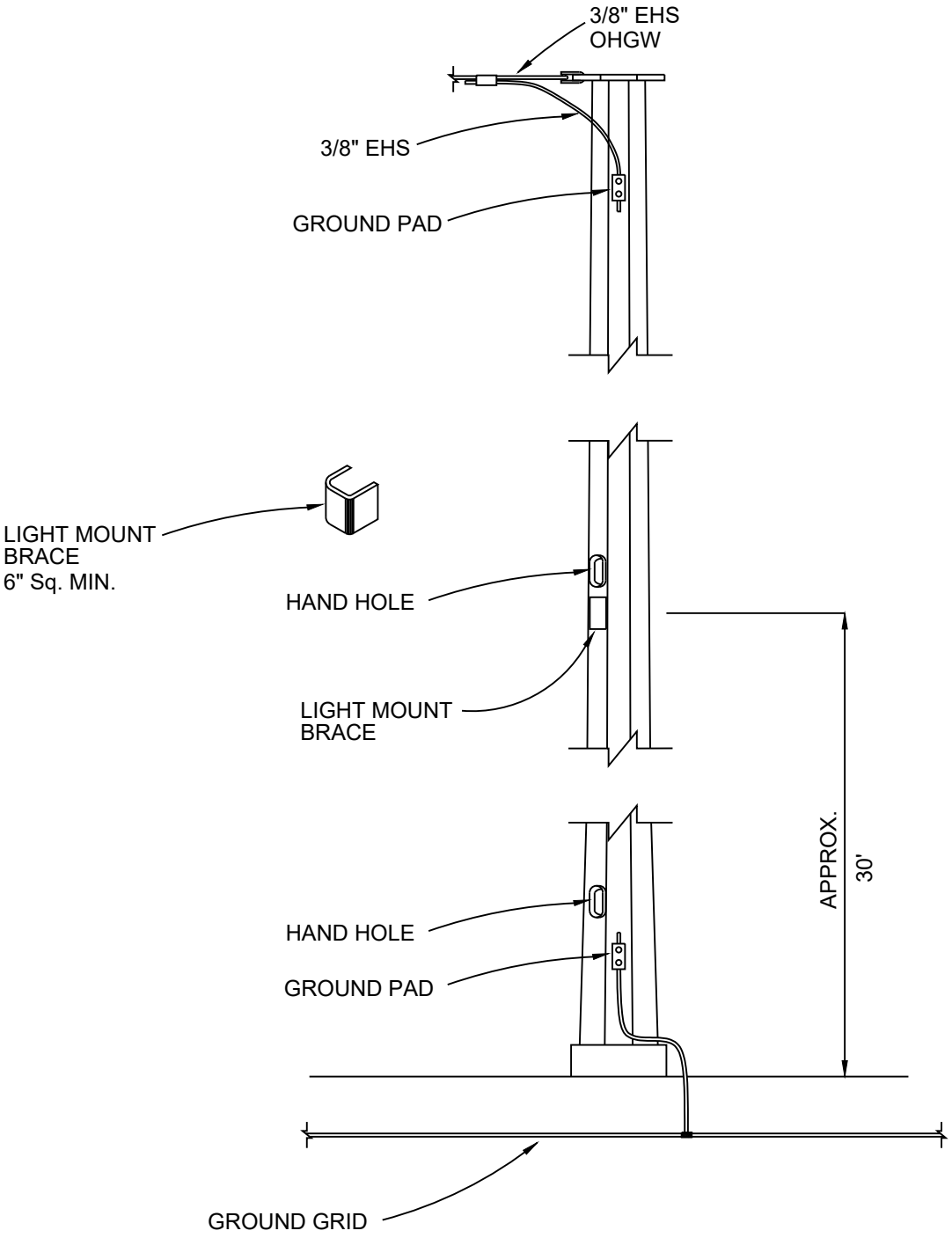

STATIC POLE DETAIL - 9M4

SGS ENGINEERING
LUBBOCK, TX DALLAS, TX SAN ANTONIO, TX

DATE: 3-12-07

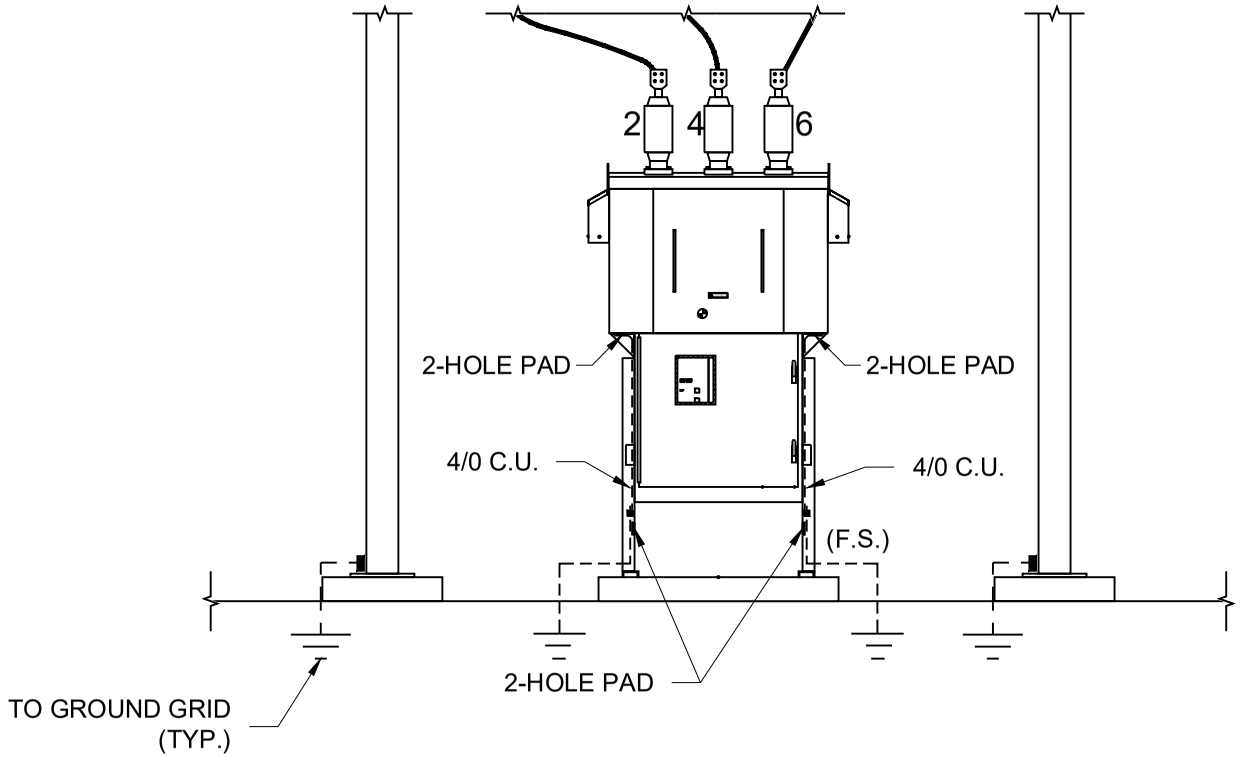

BREAKER GROUNDING - 11M

SGS ENGINEERING
LUBBOCK, TX DALLAS, TX SAN ANTONIO, TX

DATE:12-19-22

DETAIL 1-1

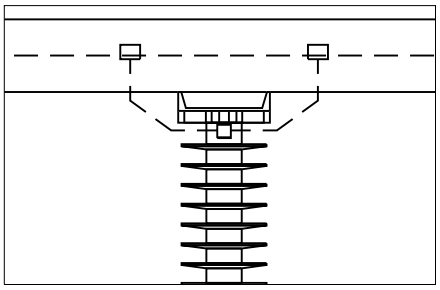

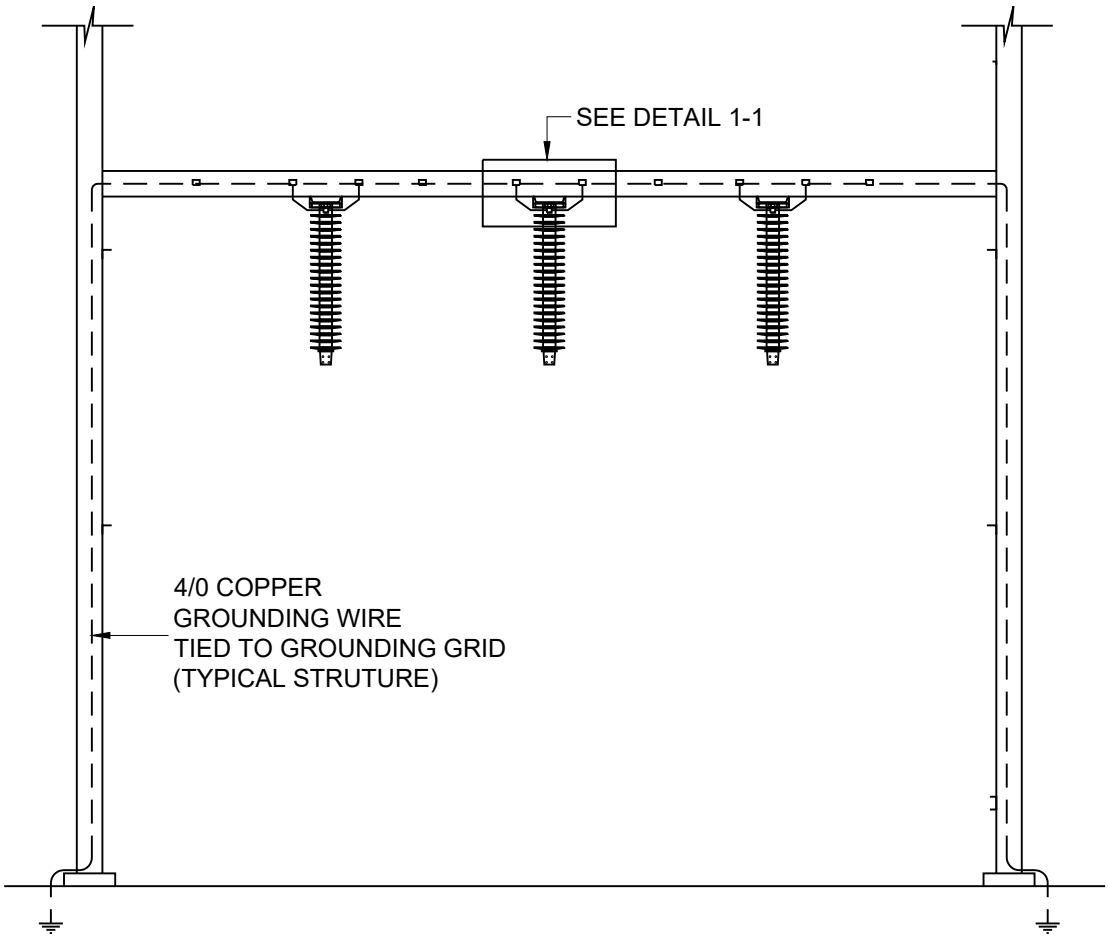

* ARRESTORS MAY BE UPRIGHT OR UNDERHUNG

LIGHTNING ARRESTER GROUNDING - 13M2

SGS ENGINEERING
LUBBOCK, TX DALLAS, TX SAN ANTONIO, TX

DATE: 4-12-21

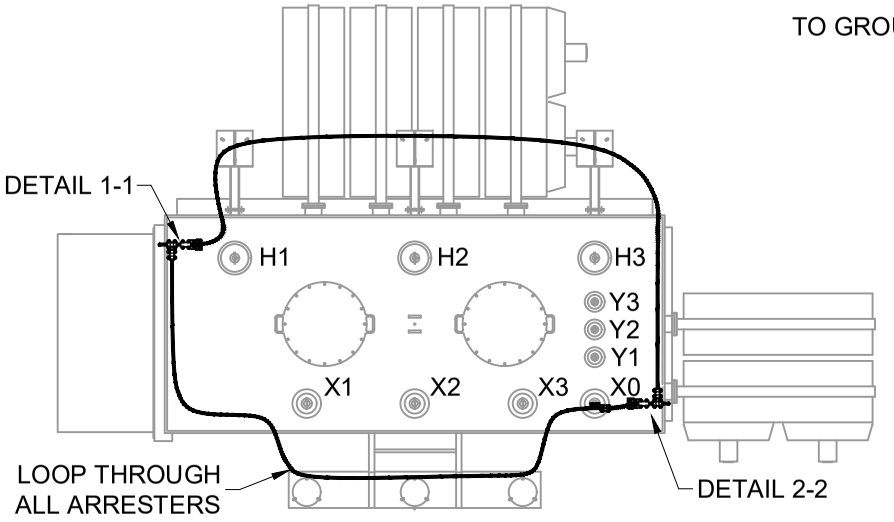

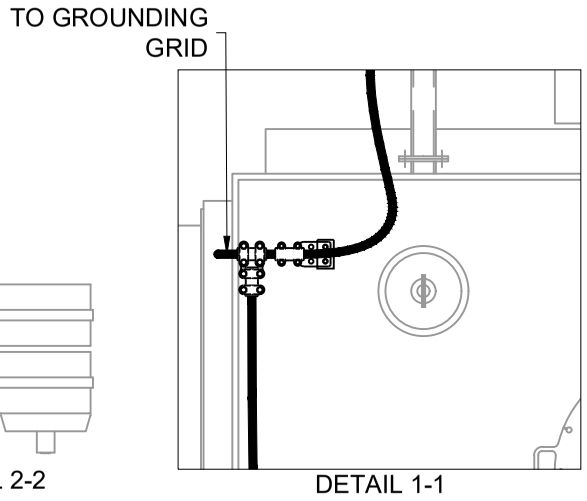

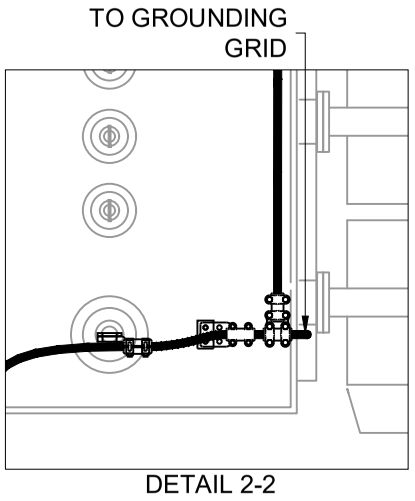

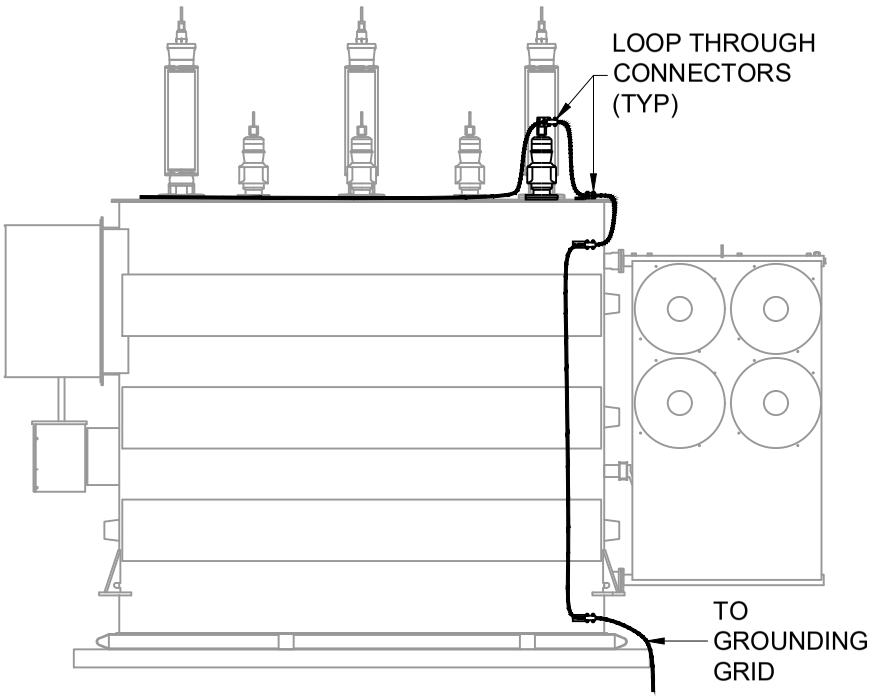

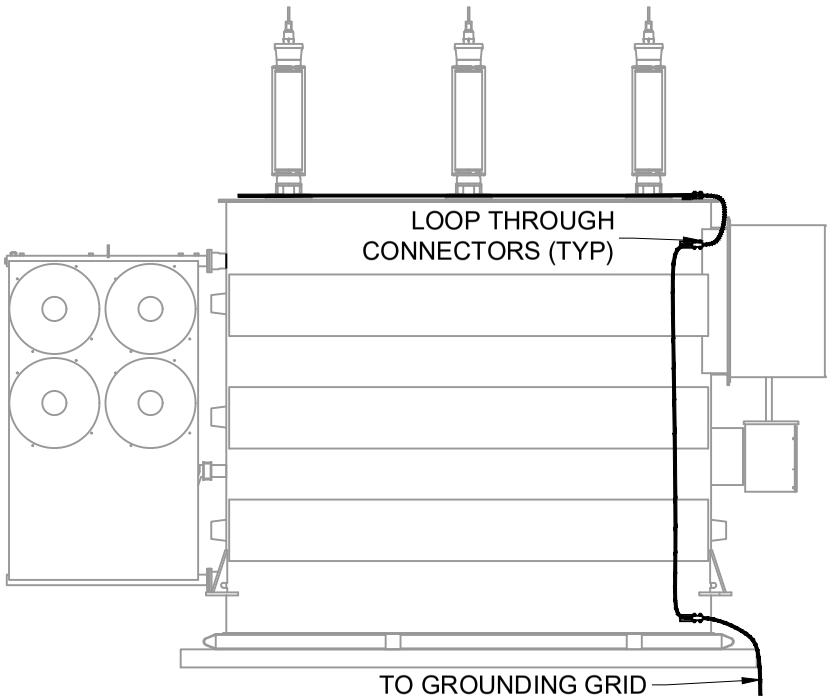

TRANSFORMER LIGHTNING ARRESTER GROUNDING - 13M10

SGS ENGINEERING
LUBBOCK, TX DALLAS, TX SAN ANTONIO, TX

DATE: 8-6-24

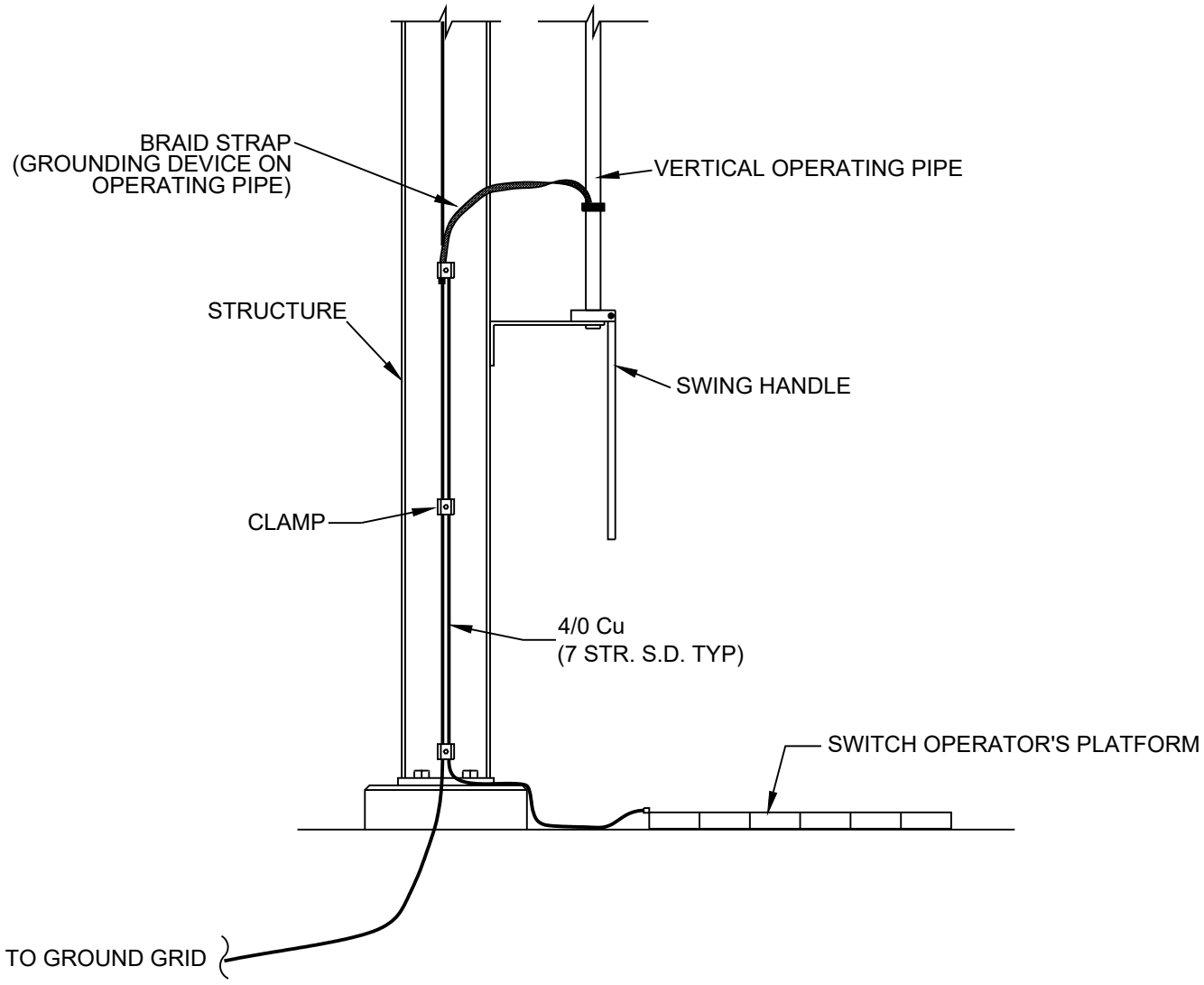

TYPICAL SWITCH GROUNDING

TYPICAL SWITCH GROUNDING - 15M1

SGS ENGINEERING
LUBBOCK, TX DALLAS, TX SAN ANTONIO, TX

DATE: 4-12-21

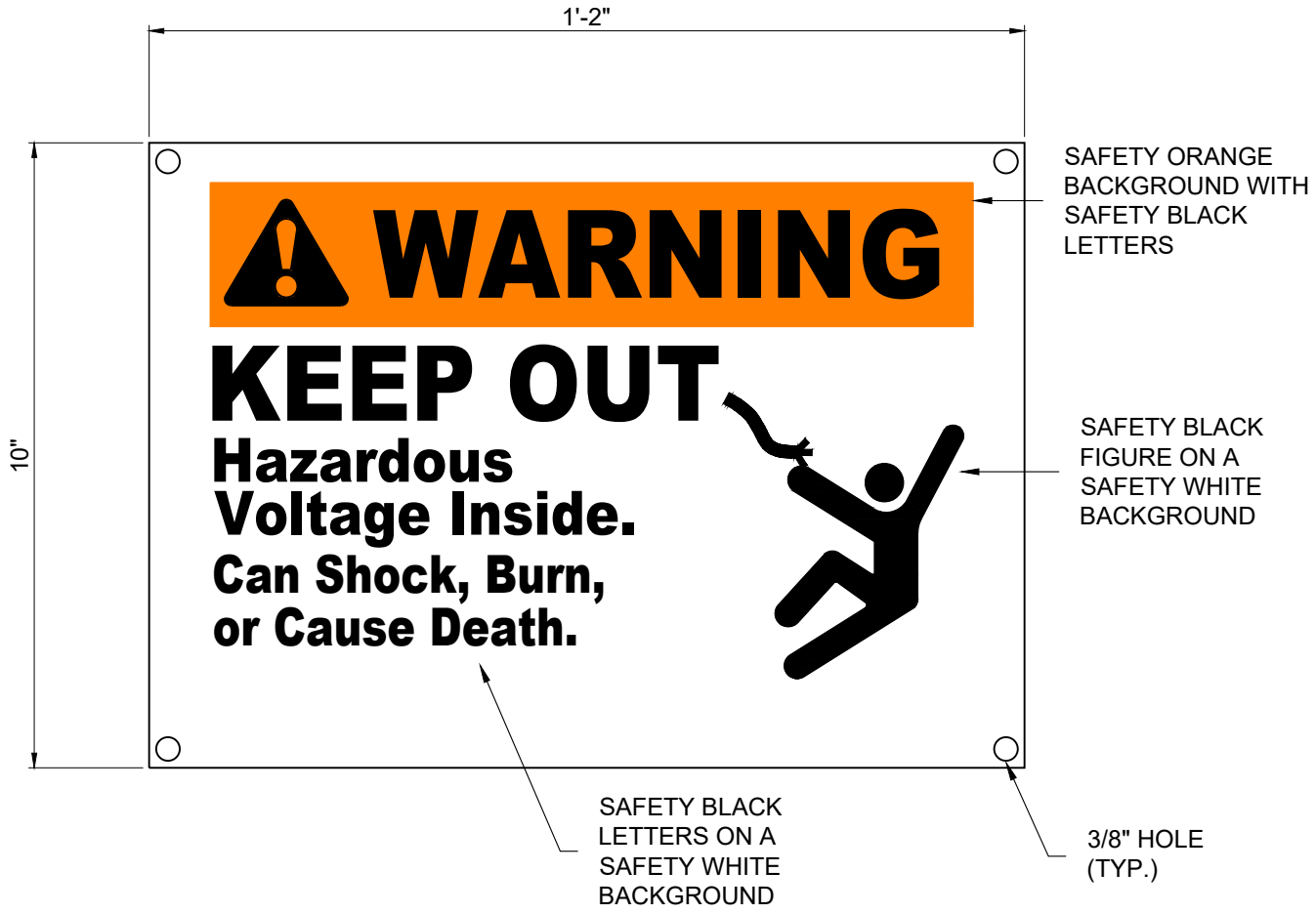

WARNING SIGN - 16M

SGS ENGINEERING
LUBBOCK, TX DALLAS, TX SAN ANTONIO, TX

DATE: 3-12-07



WARNING SIGN (SPANISH) - 16M2

SGS ENGINEERING
LUBBOCK, TX DALLAS, TX SAN ANTONIO, TX

DATE: 3-12-07

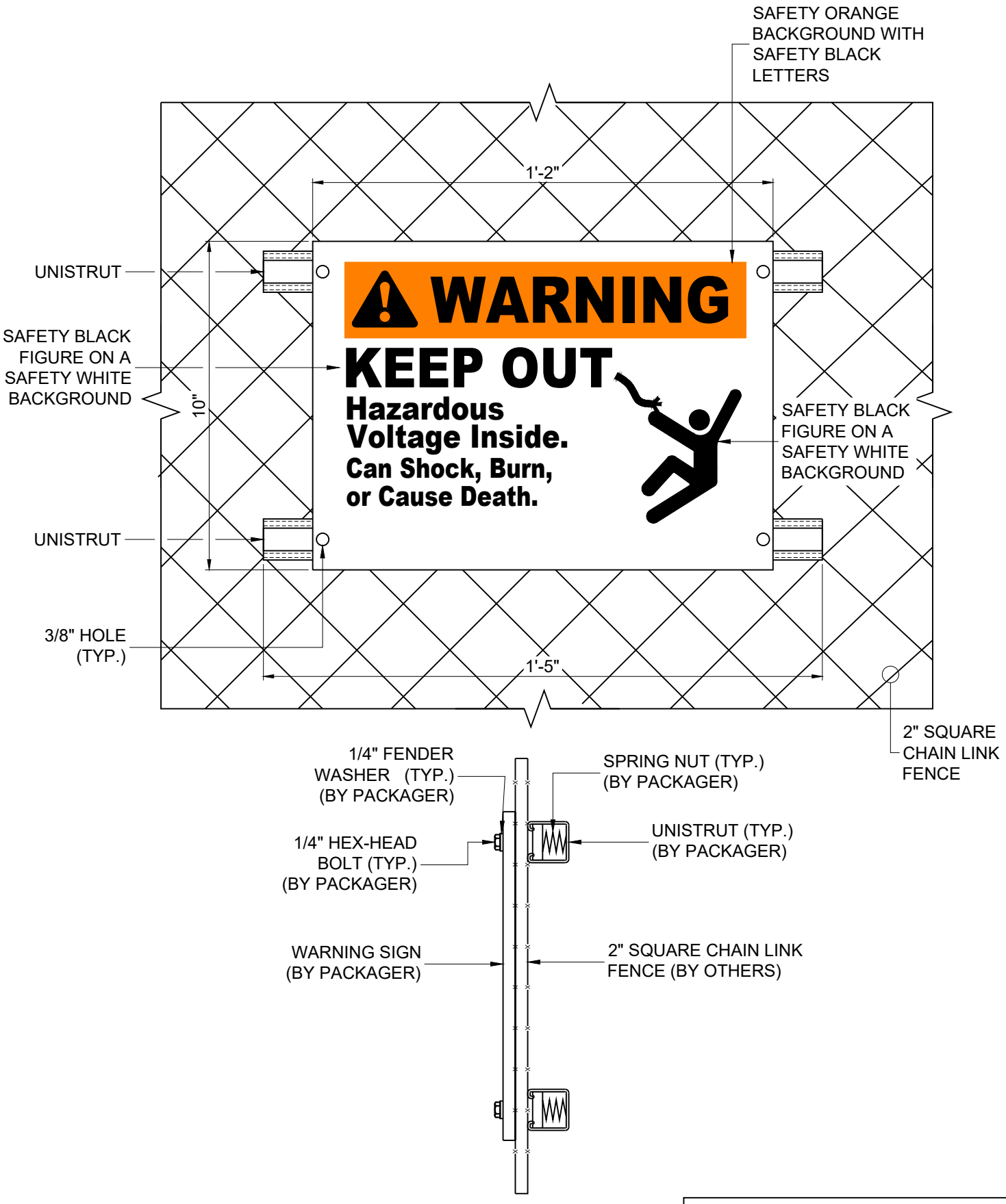

NOTE: ALL HARDWARE AND UNISTRUT SHALL BE STAINLESS STEEL OR GALVANIZED STEEL

WARNING SIGN INSTALLATION - 16M3

SGS ENGINEERING
LUBBOCK, TX DALLAS, TX SAN ANTONIO, TX

DATE: 9-22-23

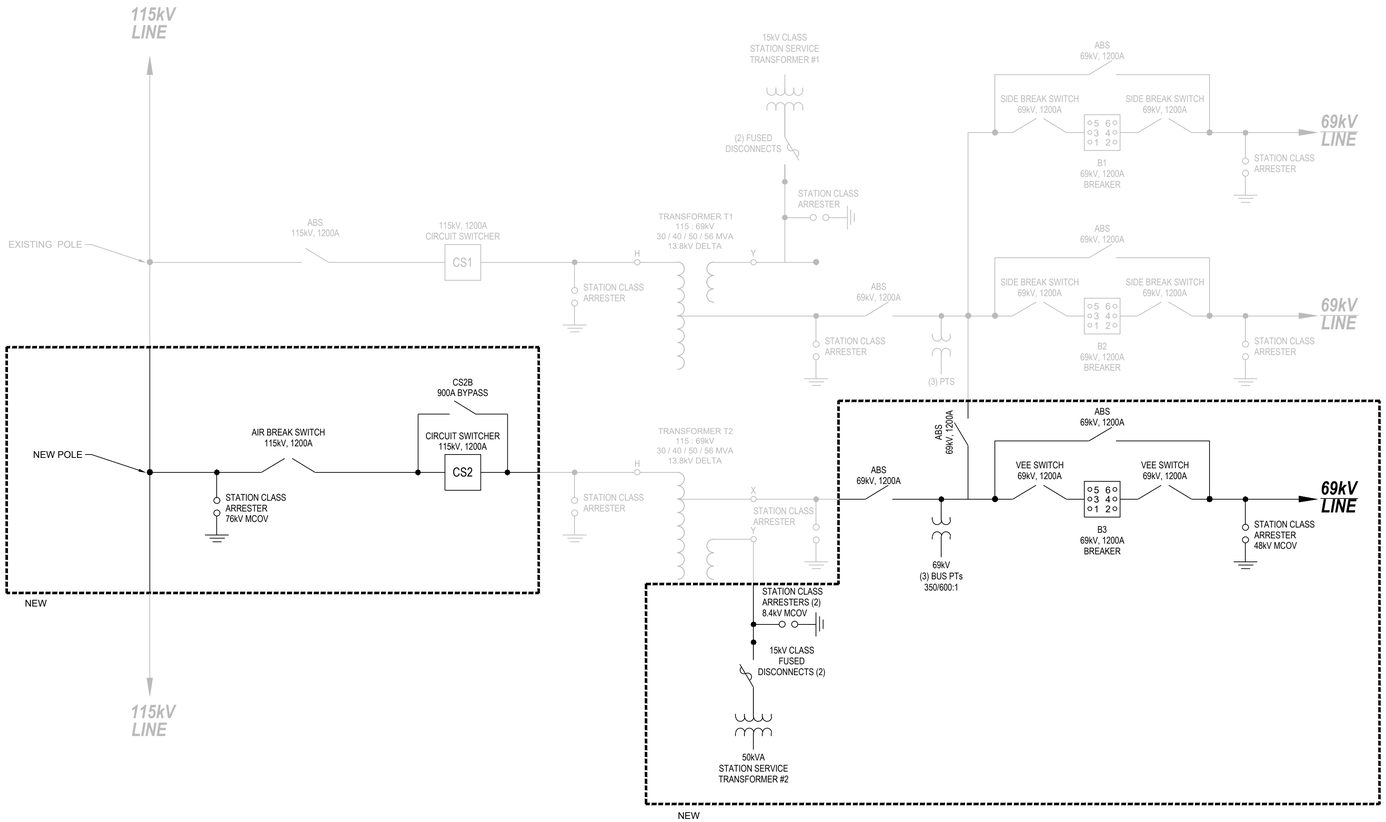

11/2/2026

FOR BID PURPOSES ONLY

THIS DRAWING IS A COPYRIGHTED WORK PRODUCT OF SGS ENGINEERING AS OF THE DATE SHOWN ON THIS DRAWING. ANY RE-USE OR COPYING OF ANY PORTION OF THIS DRAWING, WITHOUT WRITTEN PERMISSION FROM AN AUTHORIZED EMPLOYEE OF SGS ENGINEERING, IS STRICTLY PROHIBITED.

COPYRIGHTED © 2026 SGS ENGINEERING

PRINT RECORD								NO.	REVISION	DATE	BY
DATE	10-23-26							1			
FOR	PBID							2			
ISSUE	1							3			
SUPPLIER	PDF							4			
CONTRACTOR								5			
FIELD								6			
SGSE	1							7			
CLIENT	PDF							8			
								9			
								10			
								11			

STATE OF TEXAS
JOHN ERIC WEAVER
126010
LICENSED
PROFESSIONAL ENGINEER
11/2/26

SGS ENGINEERING
LUBBOCK, TX DALLAS, TX SAN ANTONIO, TX
TX FIRM No. F-9964

CLIENT:
North Plains ELECTRIC COOPERATIVE
The Home Team Advantage
A Touchstone Energy® Cooperative
The power of human connections

DRAWING:
POWER ONE-LINE
L2

PROJECT:
OCHILTREE INTERCHANGE EXPANSION

FILE: TX135-44-LC
SCALE: NONE
SHEET #: 1 OF 9

Login: Brandon.Hicks
File: s:\TX135\ochiltree interchange expansion #44\Drawings\TX135-44-LC.dwg
Device: AUTOCAD PDF (SMALLEST FILE).PC3
Paper Size: 1:1(ANSI B (17.00 x 11.00 in))

EXISTING

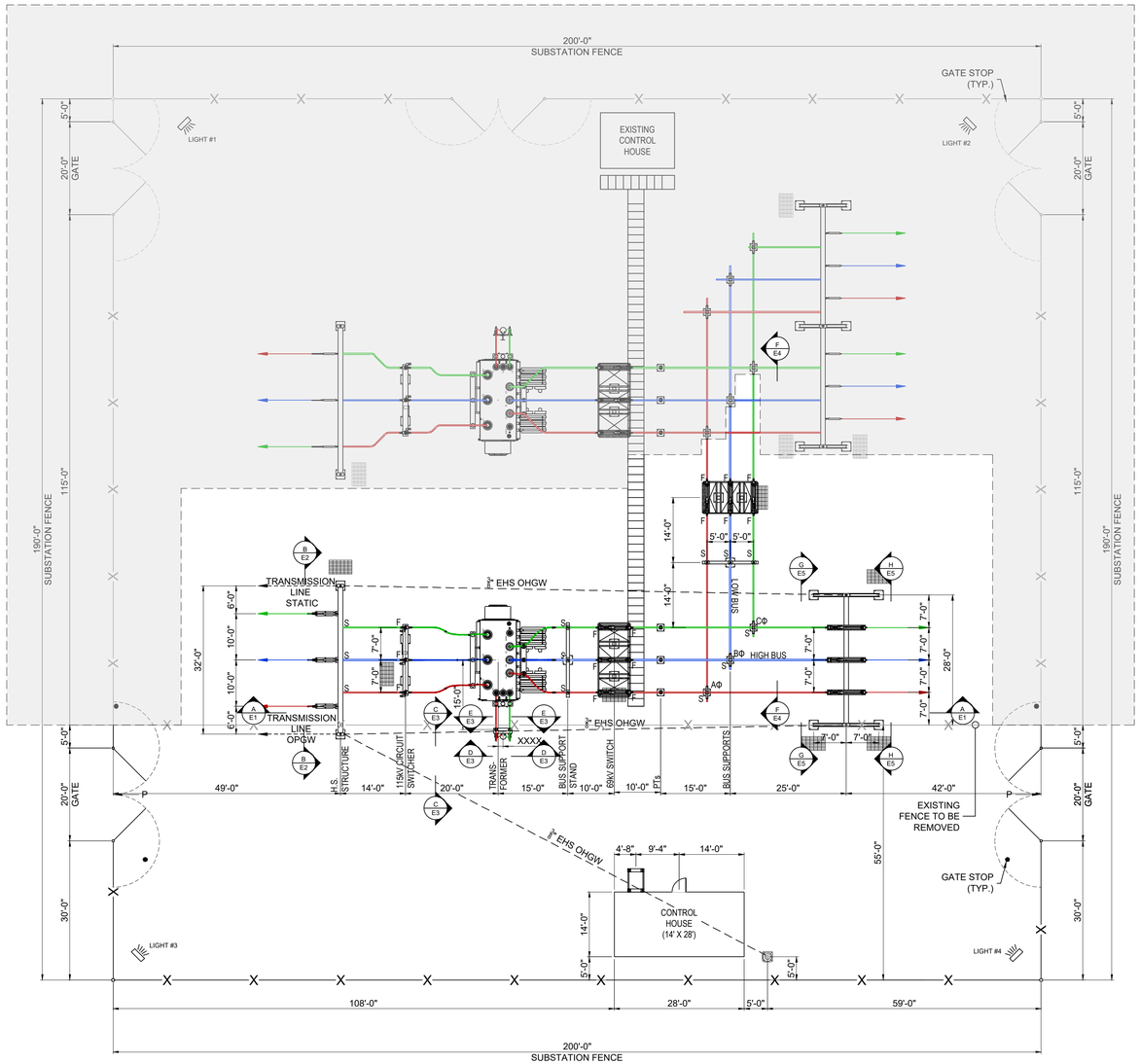



LEGEND

- EXISTING FENCE LINE
- NEW FENCE LINE
- EXISTING FENCE LINE TO BE REMOVED
- GROUNDING PLATFORM
- TRENCH
- SUBSTATION LIGHT
- GATE STOP

BUS SUPPORT CONNECTORS
F - FIXED
S - SLIP
X - EXPANSION

11/2/2026

FOR BID PURPOSES ONLY

THIS DRAWING IS A COPYRIGHTED WORK PRODUCT OF SGS ENGINEERING AS OF THE DATE SHOWN ON THIS DRAWING. ANY RE-USE OR COPYING OF ANY PORTION OF THIS DRAWING, WITHOUT WRITTEN PERMISSION FROM AN AUTHORIZED EMPLOYEE OF SGS ENGINEERING, IS STRICTLY PROHIBITED.

COPYRIGHTED © 2026 SGS ENGINEERING

Login: Brandon.Hicks
File: x:\TX135ochiltree interchange expansion #44\Drawings\TX135-44-LC.dwg
Device: AUTOCAD PDF (SMALLEST FILE).PC3
Plot Date: 11/2/2026 10:43:43 AM

PRINT RECORD	
DATE	10-23-26
FOR	PBID
ISSUE	1
SUPPLIER	PDF
CONTRACTOR	
FIELD	
SGSE	1
CLIENT	PDF

NO.	REVISION	DATE	BY
1			
2			
3			
4			
5			
6			
7			
8			
9			
10			
11			

STATE OF TEXAS
JOHN ERIC WEAVER
126010
LICENSED
PROFESSIONAL ENGINEER
11/2/26

SGS ENGINEERING
LUBBOCK, TX DALLAS, TX SAN ANTONIO, TX
TX FIRM No. F-9964

CLIENT:
North Plains ELECTRIC COOPERATIVE
The Home Team Advantage
A Touchstone Energy® Cooperative
The power of human connections

DRAWING:
PLAN VIEW
L3

PROJECT:
OCHILTREE INTERCHANGE EXPANSION

FILE: TX135-44-LC
SCALE: 1"=15'
SHEET #: 2 OF 9

(COMP) - COMPRESSION
(HP) - HOLE PAD

- (a) (2) - STRAIGHT COMP 4-HP BACK TO BACK
- (b) (2) - STRAIGHT COMP 2-HP SIDE BY SIDE
- (c) (2) - 45° COMP 2-HP SIDE BY SIDE
- (d) (2) - 90° COMP 2-HP SIDE BY SIDE
- (e) (1) - STRAIGHT COMP 2-HP
- (f) (1) - 15° COMP 4-HP
- (g) (1) - STRAIGHT COMP 4-HP
- (h) (1) - 90° COMP 2-HP
- (j) (1) - 90° COMP 4-HP
- (k) (1) - 90° 4000A PLATE, (TINNED Cu.) 4-HOLE SPACING EACH FACE
- (m) (1) - 135° 4000A PLATE, (TINNED Cu.) 4-HOLE SPACING EACH FACE
- (n1) (1) - 15° COMP 2-HP
- (n2) (2) - 15° COMP 2-HP SIDE BY SIDE
- (p) (1) - BOLTED TWO CABLE TO 4-HP
- (r) (1) - 45° COMP 4-HP

BUS SUPPORT CONNECTORS
F - FIXED
S - SLIP
X - EXPANSION

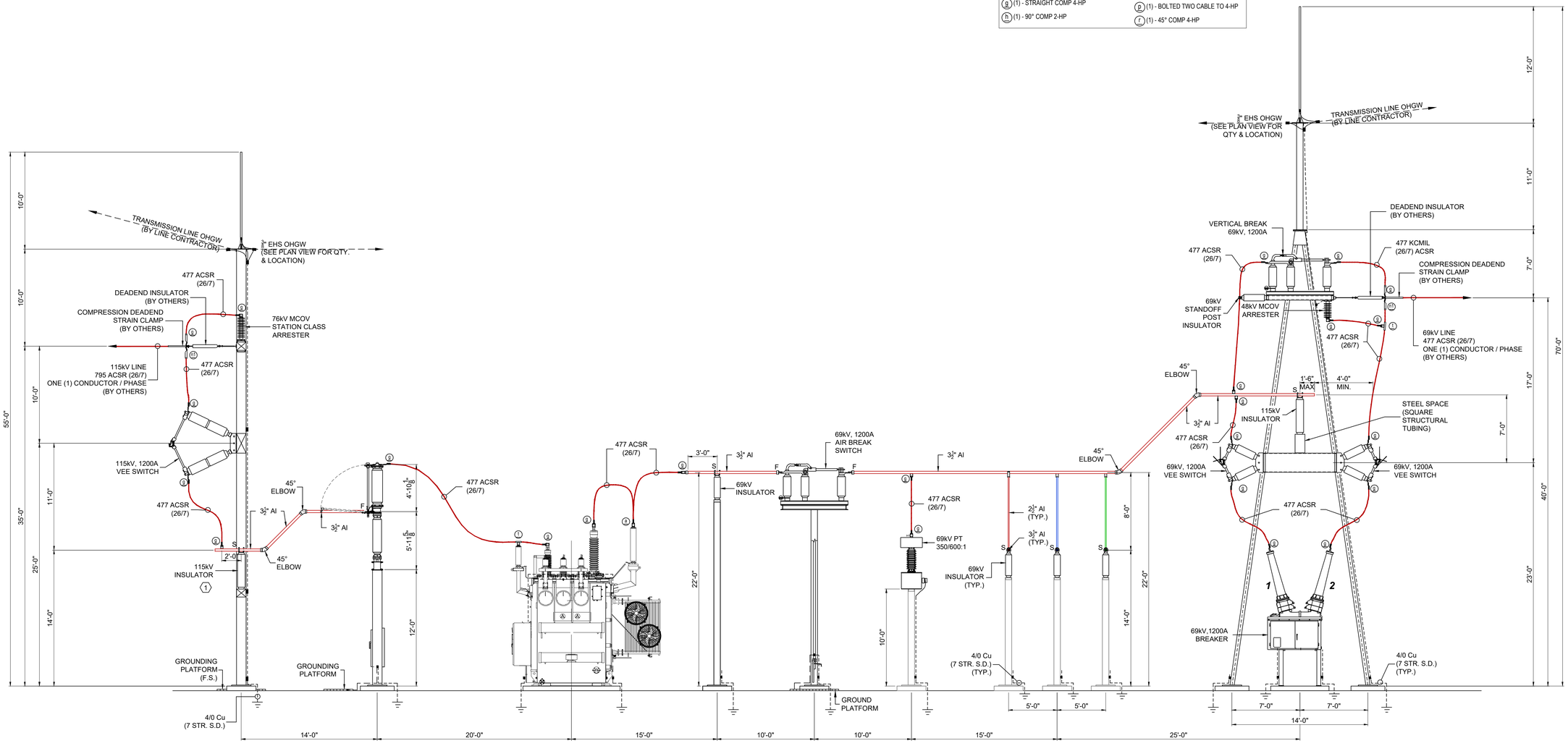

ELEVATION A-A
SCALE - 3/16" = 1'-0"

(1) NOTE: TRUSS HEIGHT TO BE DETERMINED BY PACKAGER AS NEEDED TO ACHIEVE A 14' - 0" BUS HEIGHT.

11/2/2026

FOR BID PURPOSES ONLY

THIS DRAWING IS A COPYRIGHTED WORK PRODUCT OF SGS ENGINEERING AS OF THE DATE SHOWN ON THIS DRAWING. ANY RE-USE OR COPYING OF ANY PORTION OF THIS DRAWING, WITHOUT WRITTEN PERMISSION FROM AN AUTHORIZED EMPLOYEE OF SGS ENGINEERING, IS STRICTLY PROHIBITED.

COPYRIGHTED © 2026 SGS ENGINEERING

PRINT RECORD	
DATE	10-23-26
FOR	PBID
ISSUE	1
SUPPLIER	PDF
CONTRACTOR	
FIELD	
SGSE	1
CLIENT	PDF

NO.	REVISION	DATE	BY
1			
2			
3			
4			
5			
6			
7			
8			
9			
10			
11			

STATE OF TEXAS
JOHN ERIC WEAVER
126010
LICENSED PROFESSIONAL ENGINEER

SGS ENGINEERING
LUBBOCK, TX DALLAS, TX SAN ANTONIO, TX
11/2/26 TX FIRM No. F-9964

CLIENT: North Plains ELECTRIC COOPERATIVE — The Home Team Advantage — A Touchstone Energy® Cooperative — The power of human connections

DRAWING: ELEVATION A-A
E1

PROJECT: OCHILTREE INTERCHANGE EXPANSION

FILE: TX135-44-E
SCALE: AS NOTED
SHEET #: 3 OF 9

Login: Brandon.Hicks
File: s:\TX135\ochiltree interchange expansion #44\Drawing\TX135-44-E.dwg
Device: AUTOCAD PDF (SMALLEST FILE).PC3
Plot Date: 11/2/2026, 9:25:57 PM

BUS SUPPORT CONNECTORS
F - FIXED
S - SLIP
X - EXPANSION

(COMP) - COMPRESSION
(HP) - HOLE PAD

- (a) (2) - STRAIGHT COMP 4-HP BACK TO BACK
- (b) (2) - STRAIGHT COMP 2-HP SIDE BY SIDE
- (c) (2) - 45° COMP 2-HP SIDE BY SIDE
- (d) (2) - 90° COMP 2-HP SIDE BY SIDE
- (e) (1) - STRAIGHT COMP 2-HP
- (f) (1) - 15° COMP 4-HP
- (g) (1) - STRAIGHT COMP 4-HP
- (h) (1) - 90° COMP 2-HP
- (j) (1) - 90° COMP 4-HP
- (k) (1) - 90° 4000A PLATE, (TINNED Cu.) 4-HOLE SPACING EACH FACE
- (m) (1) - 135° 4000A PLATE, (TINNED Cu.) 4-HOLE SPACING EACH FACE
- (n1) (1) - 15° COMP 2-HP
- (n2) (2) - 15° COMP 2-HP SIDE BY SIDE
- (p) (1) - BOLTED TWO CABLE TO 4-HP
- (r) (1) - 45° COMP 4-HP

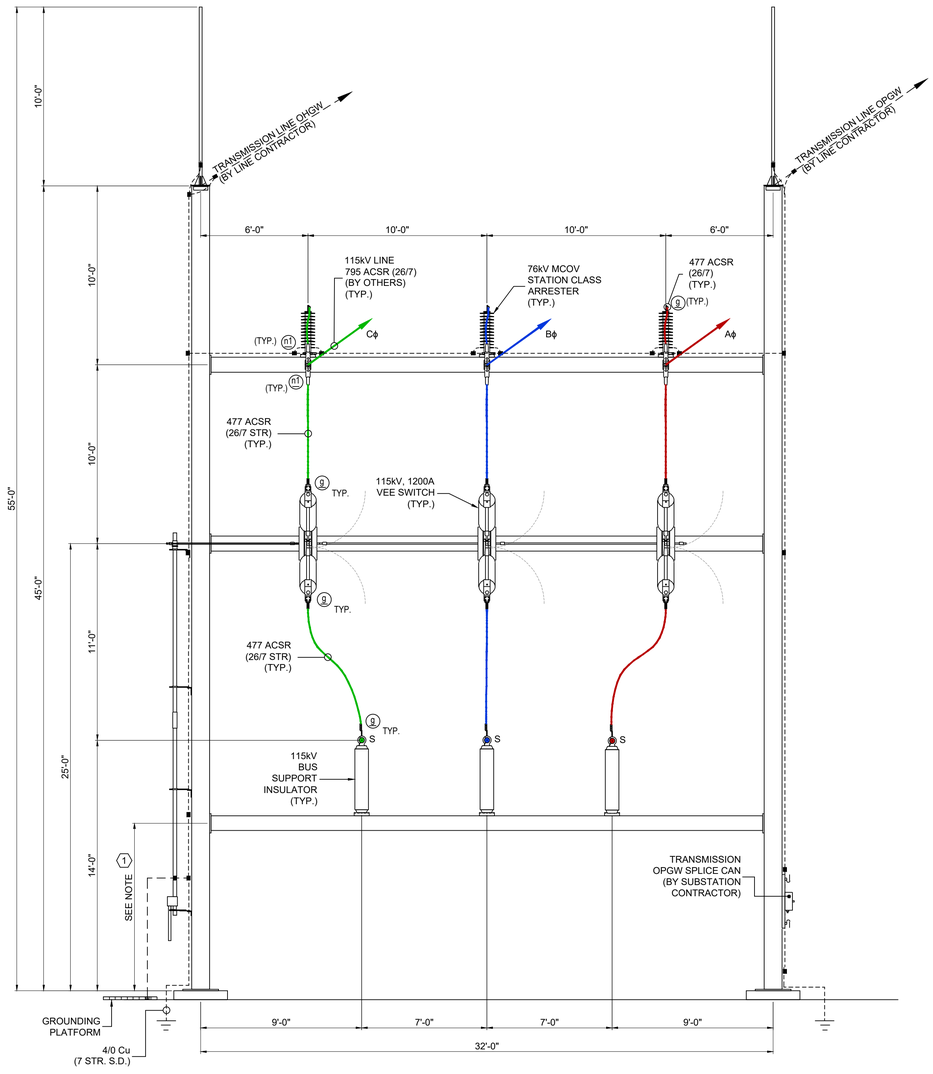

(1) NOTE: TRUSS HEIGHT TO BE DETERMINED BY PACKAGER AS NEEDED TO ACHIEVE A 14' - 0" BUS HEIGHT.

ELEVATION B-B
SCALE - 1/4" = 1'-0"

11/2/2026

FOR BID PURPOSES ONLY

THIS DRAWING IS A COPYRIGHTED WORK PRODUCT OF SGS ENGINEERING AS OF THE DATE SHOWN ON THIS DRAWING. ANY RE-USE OR COPYING OF ANY PORTION OF THIS DRAWING, WITHOUT WRITTEN PERMISSION FROM AN AUTHORIZED EMPLOYEE OF SGS ENGINEERING, IS STRICTLY PROHIBITED.

COPYRIGHTED © 2026 SGS ENGINEERING

PRINT RECORD	
DATE	10-23-26
FOR	PBID
ISSUE	1
SUPPLIER	PDF
CONTRACTOR	
FIELD	
SGSE	1
CLIENT	PDF

NO.	REVISION	DATE	BY
1			
2			
3			
4			
5			
6			
7			
8			
9			
10			
11			

STATE OF TEXAS
JOHN ERIC WEAVER
126010
LICENSED PROFESSIONAL ENGINEER

SGS ENGINEERING
LUBBOCK, TX DALLAS, TX SAN ANTONIO, TX
11/2/26 TX FIRM No. F-9964

CLIENT: North Plains ELECTRIC COOPERATIVE
The Home Team Advantage
A Touchstone Energy® Cooperative
The power of human connections

DRAWING: ELEVATION B-B
E2

PROJECT: OCHILTREE INTERCHANGE EXPANSION

FILE: TX135-44-E
SCALE: AS NOTED
SHEET #: 4 OF 9

Login: Brandon.Hicks
File: I:\TX135\ochiltree interchange expansion #44\Drawings\TX135-44-E.dwg
Device: AUTOCAD PDF (SMALLEST FILE).PC3
Plot Date: 11/2/2026 12:43:17 PM

(COMP) - COMPRESSION
(HP) - HOLE PAD

- (a) (2) - STRAIGHT COMP 4-HP BACK TO BACK
- (b) (2) - STRAIGHT COMP 2-HP SIDE BY SIDE
- (c) (2) - 45° COMP 2-HP SIDE BY SIDE
- (d) (2) - 90° COMP 2-HP SIDE BY SIDE
- (e) (1) - STRAIGHT COMP 2-HP
- (f) (1) - 15° COMP 4-HP
- (g) (1) - STRAIGHT COMP 4-HP
- (h) (1) - 90° COMP 2-HP
- (j) (1) - 90° COMP 4-HP
- (k) (1) - 90° 4000A PLATE, (TINNED Cu.) 4-HOLE SPACING EACH FACE
- (m) (1) - 135° 4000A PLATE, (TINNED Cu.) 4-HOLE SPACING EACH FACE
- (n1) (1) - 15° COMP 2-HP
- (n2) (2) - 15° COMP 2-HP SIDE BY SIDE
- (p) (1) - BOLTED TWO CABLE TO 4-HP
- (r) (1) - 45° COMP 4-HP

BUS SUPPORT CONNECTORS
F - FIXED
S - SLIP
X - EXPANSION

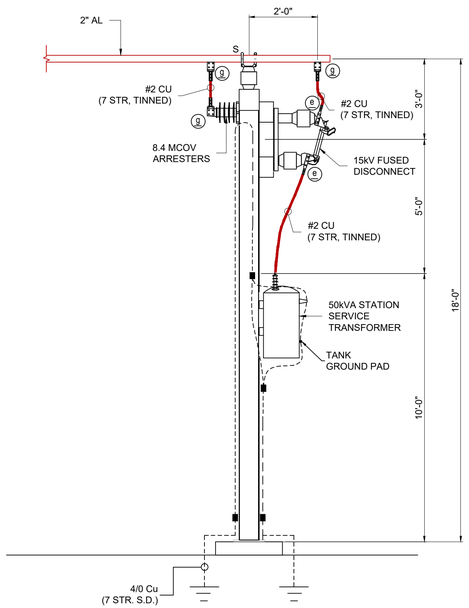

ELEVATION C-C
SCALE - 3/8" = 1'-0"

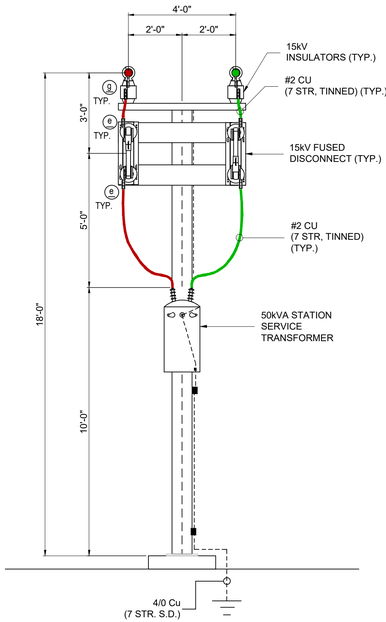

ELEVATION D-D
SCALE - 3/8" = 1'-0"

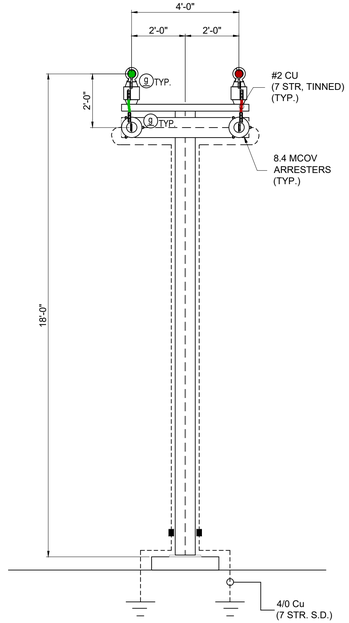

ELEVATION E-E
SCALE - 3/8" = 1'-0"

11/2/2026

FOR BID PURPOSES ONLY

THIS DRAWING IS A COPYRIGHTED WORK PRODUCT OF SGS ENGINEERING AS OF THE DATE SHOWN ON THIS DRAWING. ANY RE-USE OR COPYING OF ANY PORTION OF THIS DRAWING, WITHOUT WRITTEN PERMISSION FROM AN AUTHORIZED EMPLOYEE OF SGS ENGINEERING, IS STRICTLY PROHIBITED.

COPYRIGHTED © 2026 SGS ENGINEERING

PRINT RECORD	
DATE	10-23-26
FOR	PBID
ISSUE	1
SUPPLIER	PDF
CONTRACTOR	
FIELD	
SGSE	1
CLIENT	PDF

NO.	REVISION	DATE	BY
1			
2			
3			
4			
5			
6			
7			
8			
9			
10			
11			

STATE OF TEXAS
JOHN ERIC WEAVER
126010
LICENSED
PROFESSIONAL ENGINEER

SGS ENGINEERING
LUBBOCK, TX DALLAS, TX SAN ANTONIO, TX
11/2/26 TX FIRM No. F-9964

CLIENT:
North Plains ELECTRIC COOPERATIVE
The Home Team Advantage
A Touchstone Energy® Cooperative
The power of human connections

DRAWING:
ELEVATION C-C D-D & E-E
E3

PROJECT:
OCHILTREE INTERCHANGE EXPANSION

FILE: TX135-44-E
SCALE: AS NOTED
SHEET #: 5 OF 9

Login: Brandon.Hicks
File: x:\TX135\ochiltree interchange expansion #44\Drawings\TX135-44-E.dwg
Device: AUTOCAD PDF (SMALLEST FILE).PC3
Plot Date: 11/2/2026 10:43:43 AM

BUS SUPPORT CONNECTORS
F - FIXED
S - SLIP
X - EXPANSION

(COMP) - COMPRESSION
(HP) - HOLE PAD

- a (2) - STRAIGHT COMP 4-HP BACK TO BACK
- b (2) - STRAIGHT COMP 2-HP SIDE BY SIDE
- c (2) - 45° COMP 2-HP SIDE BY SIDE
- d (2) - 90° COMP 2-HP SIDE BY SIDE
- e (1) - STRAIGHT COMP 2-HP
- f (1) - 15° COMP 4-HP
- g (1) - STRAIGHT COMP 4-HP
- h (1) - 90° COMP 2-HP
- j (1) - 90° COMP 4-HP
- k (1) - 90° 4000A PLATE, (TINNED Cu.) 4-HOLE SPACING EACH FACE
- m (1) - 135° 4000A PLATE, (TINNED Cu.) 4-HOLE SPACING EACH FACE
- n1 (1) - 15° COMP 2-HP
- n2 (2) - 15° COMP 2-HP SIDE BY SIDE
- p (1) - BOLTED TWO CABLE TO 4-HP
- r (1) - 45° COMP 4-HP

NOTE 1:

PACKAGER SHALL SUPPLY MULTIPLE COUPLERS PER CONNECTION TO ACCOMMODATE 3 1/2"AL ON ONE END AND 3 1/2" AL, 3" AL, OR 2 1/2" AL ON THE OTHER. SEFCOR CAT # W5CR-6360, W5CR-6362, & WSC-6363 OR EQUIVALENT.

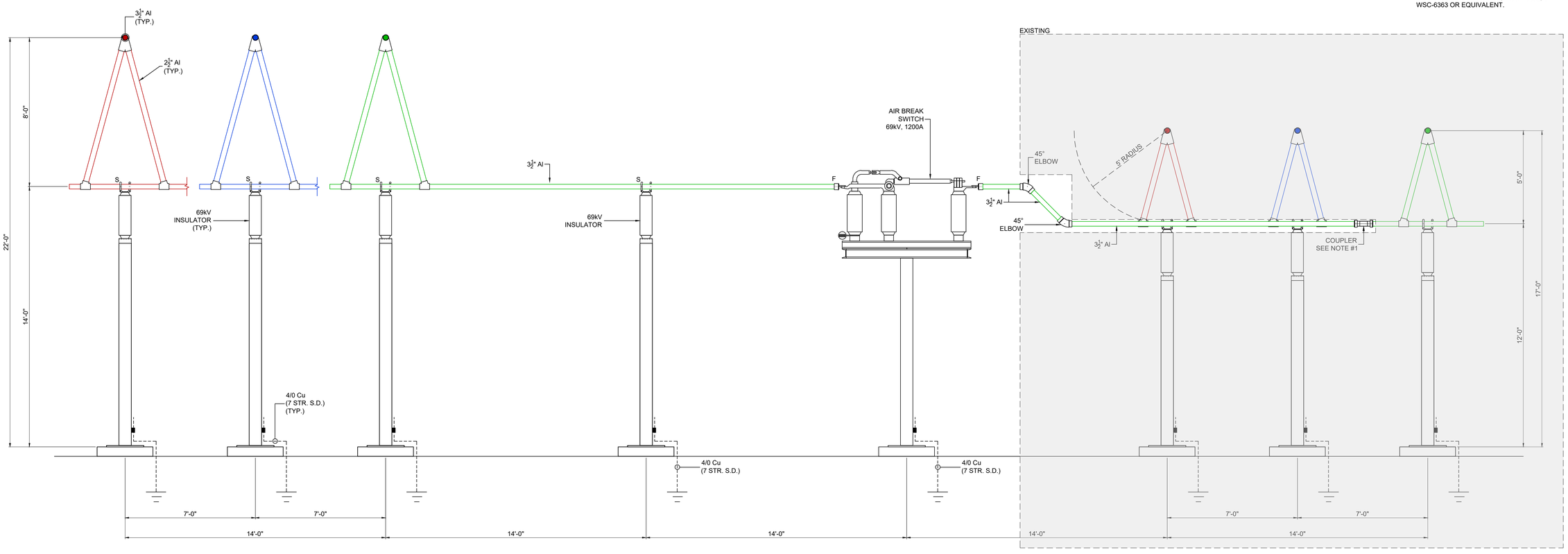

ELEVATION F-F
SCALE - 3/8" = 1'-0"

11/2/2026

FOR BID PURPOSES ONLY

THIS DRAWING IS A COPYRIGHTED WORK PRODUCT OF SGS ENGINEERING AS OF THE DATE SHOWN ON THIS DRAWING. ANY RE-USE OR COPYING OF ANY PORTION OF THIS DRAWING, WITHOUT WRITTEN PERMISSION FROM AN AUTHORIZED EMPLOYEE OF SGS ENGINEERING, IS STRICTLY PROHIBITED.

COPYRIGHTED © 2026 SGS ENGINEERING

PRINT RECORD		NO.	REVISION	DATE	BY
DATE	10-23-26	1			
FOR	PBID	2			
ISSUE	1	3			
SUPPLIER	PDF	4			
CONTRACTOR		5			
FIELD		6			
SGSE	1	7			
CLIENT	PDF	8			
		9			
		10			
		11			

STATE OF TEXAS
JOHN ERIC WEAVER
126010
LICENSED
PROFESSIONAL ENGINEER

SGS ENGINEERING
LUBBOCK, TX DALLAS, TX SAN ANTONIO, TX
11/2/26 TX FIRM No. F-9964

CLIENT: North Plains ELECTRIC COOPERATIVE
The Home Team Advantage
A Touchstone Energy® Cooperative
The power of human connections

DRAWING: ELEVATION F-F
E4

PROJECT: OCHILTREE INTERCHANGE EXPANSION

FILE: TX135-44-E
SCALE: AS NOTED
SHEET #: 6 OF 9

Login: Brandon Hicks
File: s:\TX135\ochiltree interchange expansion #44\Drawings\TX135-44-E.dwg
Device: AUTOCAD PDF (SMALLEST FILE).PC3
Plot Date: 11/2/2026 12:24:52 PM

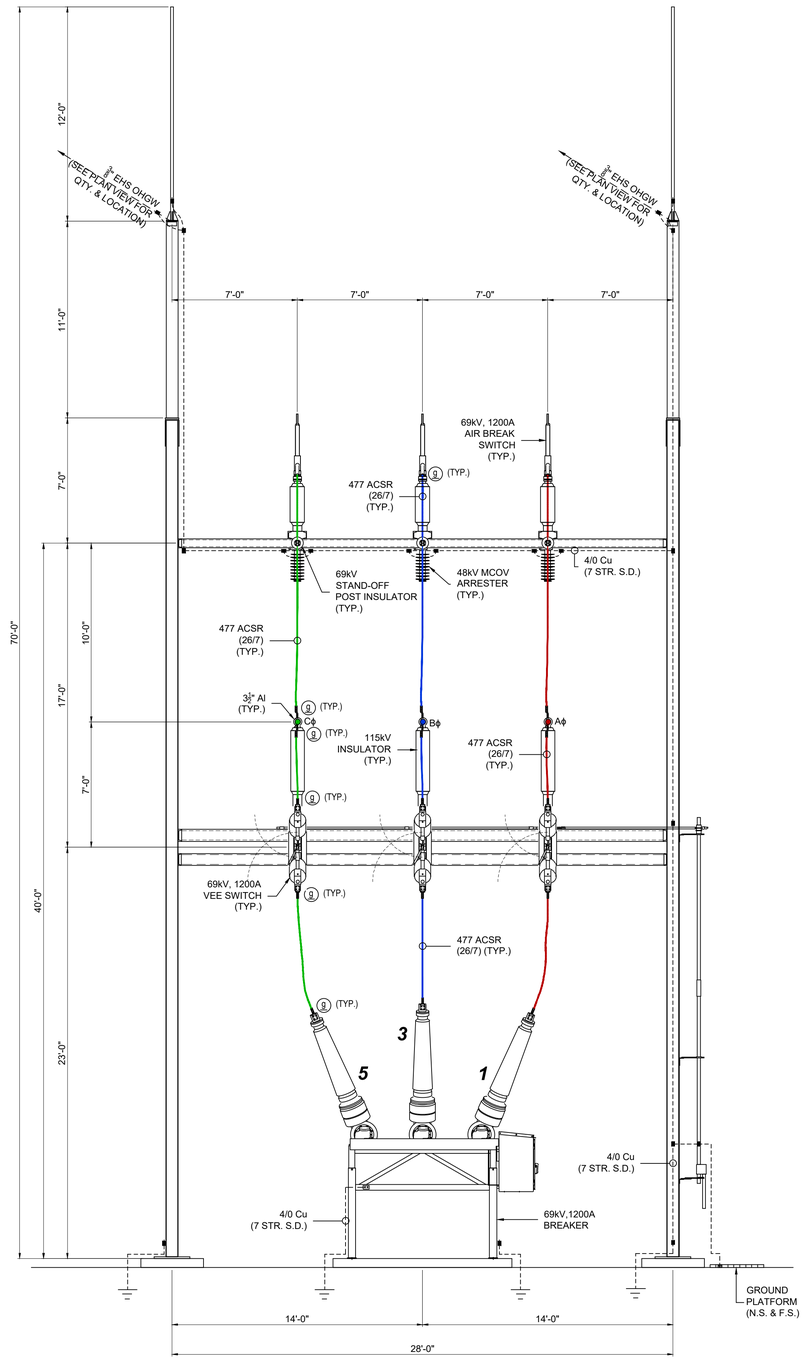

ELEVATION G-G
SCALE - 1/4" = 1'-0"

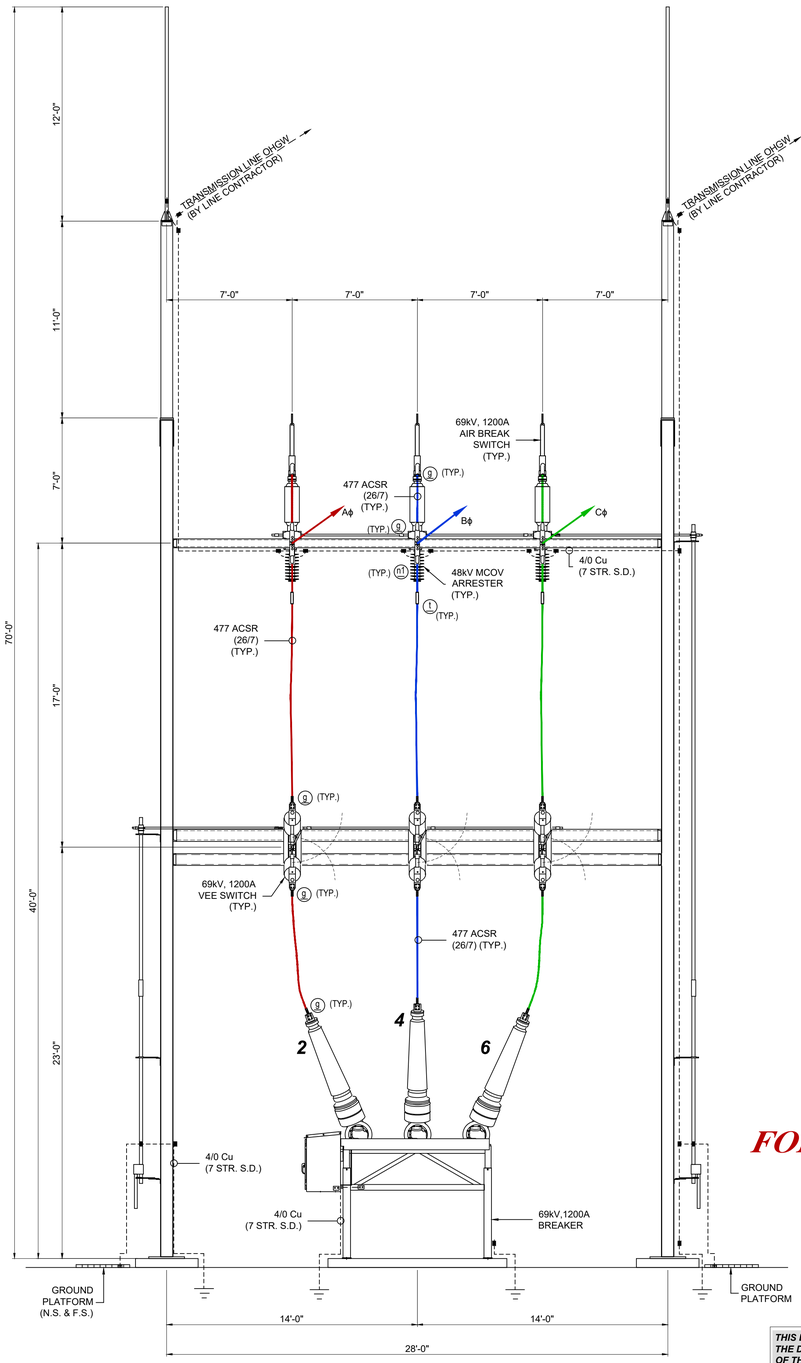

ELEVATION H-H
SCALE - 1/4" = 1'-0"

(COMP) - COMPRESSION
(HP) - HOLE PAD

- (a) (2) - STRAIGHT COMP 4-HP BACK TO BACK
- (b) (2) - STRAIGHT COMP 2-HP SIDE BY SIDE
- (c) (2) - 45° COMP 2-HP SIDE BY SIDE
- (d) (2) - 90° COMP 2-HP SIDE BY SIDE
- (e) (1) - STRAIGHT COMP 2-HP
- (f) (1) - 15° COMP 4-HP
- (g) (1) - STRAIGHT COMP 4-HP
- (h) (1) - 90° COMP 2-HP
- (j) (1) - 90° COMP 4-HP
- (k) (1) - 90° 4000A PLATE, (TINNED Cu.) 4-HOLE SPACING EACH FACE
- (m) (1) - 135° 4000A PLATE, (TINNED Cu.) 4-HOLE SPACING EACH FACE
- (n1) (1) - 15° COMP 2-HP
- (n2) (2) - 15° COMP 2-HP SIDE BY SIDE
- (p) (1) - BOLTED TWO CABLE TO 4-HP
- (r) (1) - 45° COMP 4-HP

BUS SUPPORT CONNECTORS
F - FIXED
S - SLIP
X - EXPANSION

11/2/2026

FOR BID PURPOSES ONLY

THIS DRAWING IS A COPYRIGHTED WORK PRODUCT OF SGS ENGINEERING AS OF THE DATE SHOWN ON THIS DRAWING. ANY RE-USE OR COPYING OF ANY PORTION OF THIS DRAWING, WITHOUT WRITTEN PERMISSION FROM AN AUTHORIZED EMPLOYEE OF SGS ENGINEERING, IS STRICTLY PROHIBITED.

COPYRIGHTED © 2026 SGS ENGINEERING

PRINT RECORD							
DATE	10-23-26						
FOR	PBID						
ISSUE	1						
SUPPLIER	PDF						
CONTRACTOR							
FIELD							
SGSE	1						
CLIENT	PDF						

NO.	REVISION	DATE	BY
1			
2			
3			
4			
5			
6			
7			
8			
9			
10			
11			

STATE OF TEXAS
JOHN ERIC WEAVER
126010
LICENSED PROFESSIONAL ENGINEER
11/2/26

SGS ENGINEERING
LUBBOCK, TX DALLAS, TX SAN ANTONIO, TX
TX FIRM No. F-9964

CLIENT: North Plains ELECTRIC COOPERATIVE
The Home Team Advantage
A Touchstone Energy® Cooperative
The power of human connections

DRAWING: ELEVATION G-G H-H
E5

PROJECT: OCHILTREE INTERCHANGE EXPANSION

FILE:	TX135-44-E
SCALE:	AS NOTED
SHEET #:	7 OF 9

Login: Brandon.Hicks
File: s:\TX135\ochiltree interchange expansion #44\Drawing\TX135-44-E.dwg
Device: AUTOCAD PDF (SMALLEST FILE).PC3
Plot Date: 11/2/2026 12:42:53 PM

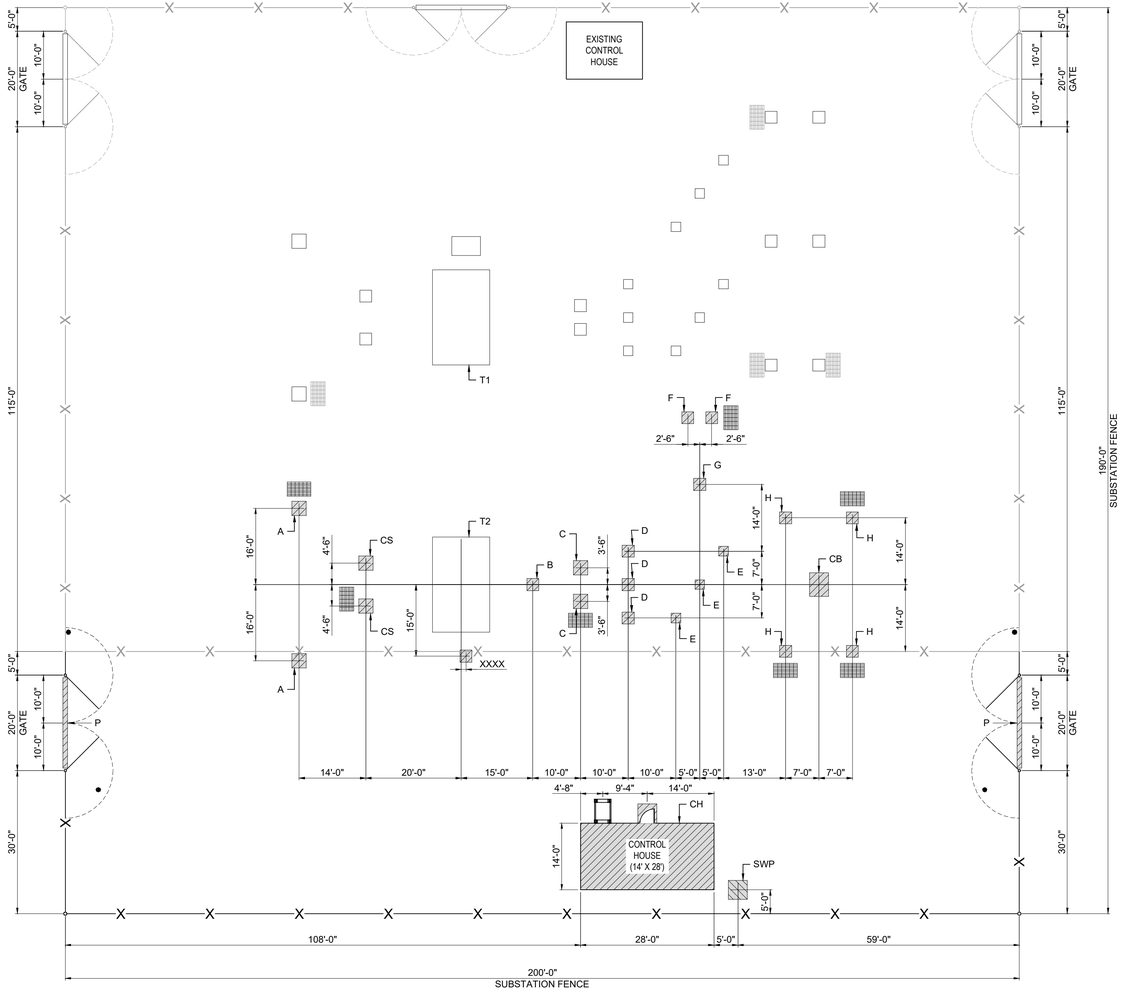

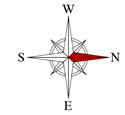

LEGEND

- FENCE LINE
- GROUNDING PLATFORM
- TRENCH
- GATE STOP
- ORIENTATION ARROW
- FOUNDATION (EXISTING)
- FOUNDATION (NEW)

11/2/2026

FOR BID PURPOSES ONLY

THIS DRAWING IS A COPYRIGHTED WORK PRODUCT OF SGS ENGINEERING AS OF THE DATE SHOWN ON THIS DRAWING. ANY RE-USE OR COPYING OF ANY PORTION OF THIS DRAWING, WITHOUT WRITTEN PERMISSION FROM AN AUTHORIZED EMPLOYEE OF SGS ENGINEERING, IS STRICTLY PROHIBITED.

COPYRIGHTED © 2026 SGS ENGINEERING

PRINT RECORD	
DATE	10-23-26
FOR	PBID
ISSUE	1
SUPPLIER	PDF
CONTRACTOR	
FIELD	
SGSE	1
CLIENT	PDF

NO.	REVISION	DATE	BY
1			
2			
3			
4			
5			
6			
7			
8			
9			
10			
11			

STATE OF TEXAS
JOHN ERIC WEAVER
126010
LICENSED
PROFESSIONAL ENGINEER
11/2/26

SGS ENGINEERING
LUBBOCK, TX DALLAS, TX SAN ANTONIO, TX
TX FIRM No. F-9964

CLIENT:
North Plains ELECTRIC COOPERATIVE
The Home Team Advantage
A Touchstone Energy® Cooperative
The power of human connections

DRAWING:
FOUNDATION LAYOUT
L4

PROJECT:
OCHILTREE INTERCHANGE EXPANSION

FILE:	TX135-44-LC
SCALE:	1"=15'
SHEET #:	8 OF 9

Login: Brandon.Hicks
File: s:\TX135\ochiltree interchange expansion #44\Drawings\TX135-44-LC.dwg
Device: AUTOCAD PDF (SMALLEST FILE).PC3
Plot Date: 11/2/2026 12:04:51 PM

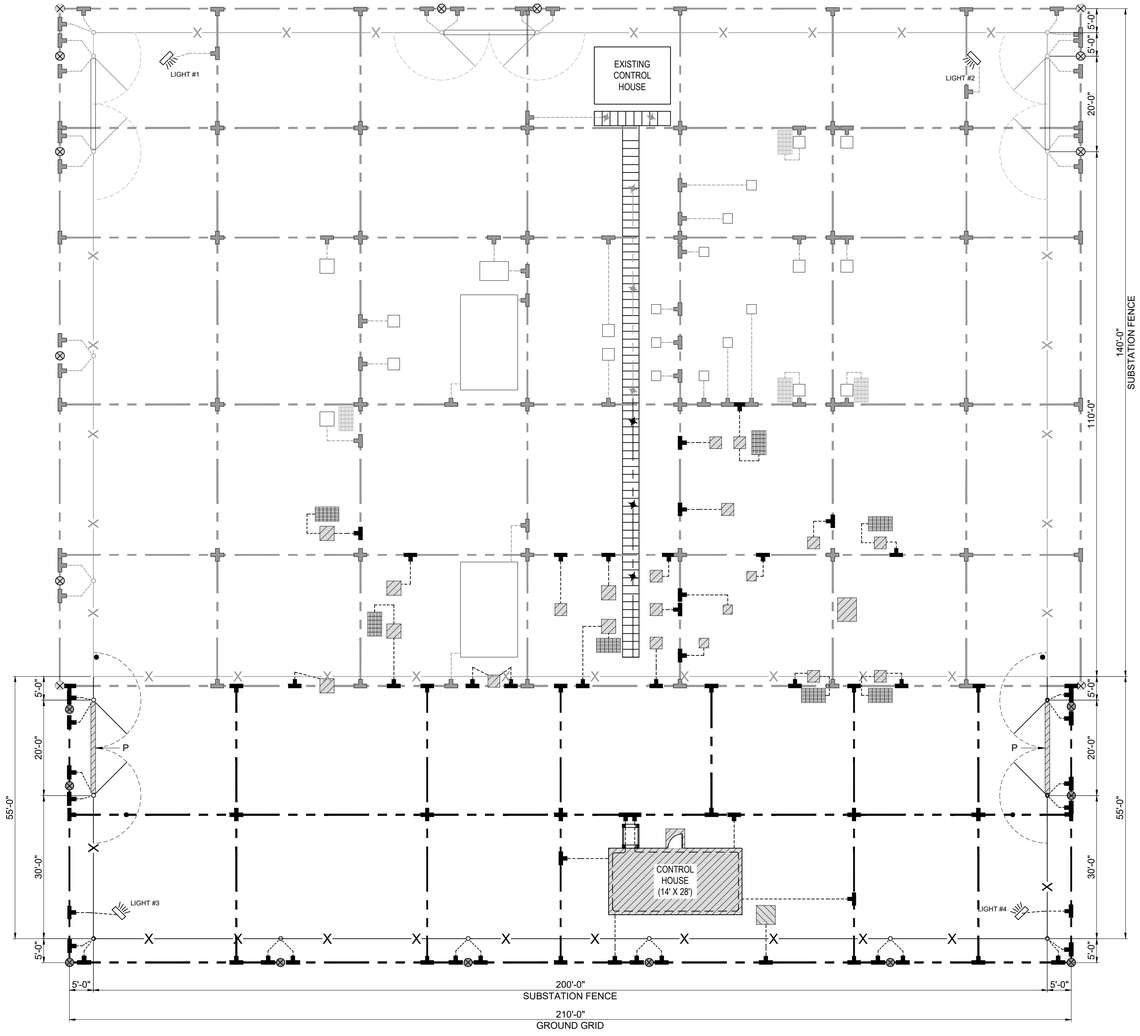

W
S N
E

LEGEND

- OIL CONTAINMENT
- GROUNDING PLATFORM
- FOUNDATION (EXISTING)
- FOUNDATION (NEW)
- FENCE (EXISTING)
- FENCE (NEW)
- NEW 4/0 SEVEN STRAND BARE CU. S.D.
- EXISTING 4/0 SEVEN STRAND BARE CU. S.D.
- NEW 4/0 GROUNDING TAIL
- EXISTING 4/0 GROUNDING TAIL
- 1"Ø X 10'-0" COPPERWELD GROUND RODS (EXISTING)
- 1"Ø X 10'-0" COPPERWELD GROUND RODS (NEW)
- NEW 4/0 TO 4/0 CROSS CONN.
- EXISTING 4/0 TO 4/0 CROSS CONN.
- NEW 4/0 TO 4/0 TEE CONN.
- EXISTING 4/0 TO 4/0 TEE CONN.
- NEW 4/0 TO 4/0 PARALLEL
- EXISTING 4/0 TO 4/0 PARALLEL
- SUBSTATION LIGHT

11/2/2026

FOR BID PURPOSES ONLY

THIS DRAWING IS A COPYRIGHTED WORK PRODUCT OF SGS ENGINEERING AS OF THE DATE SHOWN ON THIS DRAWING. ANY RE-USE OR COPYING OF ANY PORTION OF THIS DRAWING, WITHOUT WRITTEN PERMISSION FROM AN AUTHORIZED EMPLOYEE OF SGS ENGINEERING, IS STRICTLY PROHIBITED.

COPYRIGHTED © 2026 SGS ENGINEERING

PRINT RECORD	
DATE	10-23-26
FOR	PBID
ISSUE	1
SUPPLIER	PDF
CONTRACTOR	
FIELD	
SGSE	1
CLIENT	PDF

NO.	REVISION	DATE	BY
1			
2			
3			
4			
5			
6			
7			
8			
9			
10			
11			

STATE OF TEXAS
JOHN ERIC WEAVER
126010
LICENSED
PROFESSIONAL ENGINEER
11/2/26

SGS ENGINEERING
LUBBOCK, TX DALLAS, TX SAN ANTONIO, TX
TX FIRM No. F-9964

CLIENT:
North Plains ELECTRIC COOPERATIVE
The Home Team Advantage
A Touchstone Energy® Cooperative
The power of human connections

DRAWING:
GROUNDING LAYOUT
L5

PROJECT:
OCHILTREE INTERCHANGE EXPANSION

FILE: TX135-44-LC
SCALE: 1"=15'
SHEET #: 9 OF 9

Login: Brandon.Hicks
File: n:\TX135\ochiltree interchange expansion #44\Drawings\TX135-44-LC.dwg
Device: AUTOCAD PDF (SMALLEST FILE).PC3
Plotted: 11/2/2026 12:04:51 PM